US009082594B2

(12) **United States Patent**
Valcore, Jr. et al.

(10) **Patent No.: US 9,082,594 B2**
(45) **Date of Patent: Jul. 14, 2015**

(54) **ETCH RATE MODELING AND USE THEREOF FOR IN-CHAMBER AND CHAMBER-TO-CHAMBER MATCHING**

(71) Applicant: **Lam Research Corporation**, Fremont, CA (US)

(72) Inventors: **John C. Valcore, Jr.**, Berkeley, CA (US); **Harmeet Singh**, Fremont, CA (US); **Henry Povolny**, Newark, CA (US)

(73) Assignee: **Lam Research Corporation**, Fremont, CA (US)

(*) Notice: Subject to any disclaimer, the term of this patent is extended or adjusted under 35 U.S.C. 154(b) by 0 days.

(21) Appl. No.: **14/317,360**

(22) Filed: **Jun. 27, 2014**

(65) **Prior Publication Data**

US 2015/0028744 A1 Jan. 29, 2015

Related U.S. Application Data

(63) Continuation of application No. 14/243,705, filed on Apr. 2, 2014.

(60) Provisional application No. 61/858,985, filed on Jul. 26, 2013.

(51) **Int. Cl.**
H01J 7/24 (2006.01)
H01J 31/26 (2006.01)
(Continued)

(52) **U.S. Cl.**
CPC ***H01J 37/32926*** (2013.01); ***G05B 19/418*** (2013.01); ***H01J 37/3299*** (2013.01); ***H01J 37/32183*** (2013.01); ***H01J 37/32935*** (2013.01)

(58) **Field of Classification Search**
CPC H01J 7/24; H01J 31/26; H01J 37/32183; H01J 37/32926; H01J 37/32935; H01J 37/3299; G05B 19/418
USPC 315/111.01, 111.21, 111.41, 111.51, 315/111.71; 156/345.21, 345.28, 345.48
See application file for complete search history.

(56) **References Cited**

U.S. PATENT DOCUMENTS

4,377,961	A	3/1983	Bode
4,420,790	A	12/1983	Golke et al.

(Continued)

FOREIGN PATENT DOCUMENTS

JP	2001-127045	A	5/2001
JP	2004239211	A	8/2004

(Continued)

OTHER PUBLICATIONS

Thorsten, Lill et al, "Controlling ION Energy Within a Plasma Chamber", U.S. Appl. No. 13/930,138, filed Jun. 28, 2013.

(Continued)

Primary Examiner — Jimmy Vu
(74) *Attorney, Agent, or Firm* — Martine Penilla Group, LLP

(57) **ABSTRACT**

A method for performing chamber-to-chamber matching includes receiving a voltage and a current measured at an output of an RF generator of a first plasma system. The method further includes calculating a sum of terms. The first term is a first product of a coefficient and a function of the voltage. The second term is a second product of a coefficient and a function of the current. The third term is a third product of a coefficient, a function of the voltage, and a function of the current. The method further includes determining the sum to be the etch rate associated with the first plasma system and adjusting power output from an RF generator of a second plasma system to achieve the etch rate associated with the first plasma system.

20 Claims, 10 Drawing Sheets

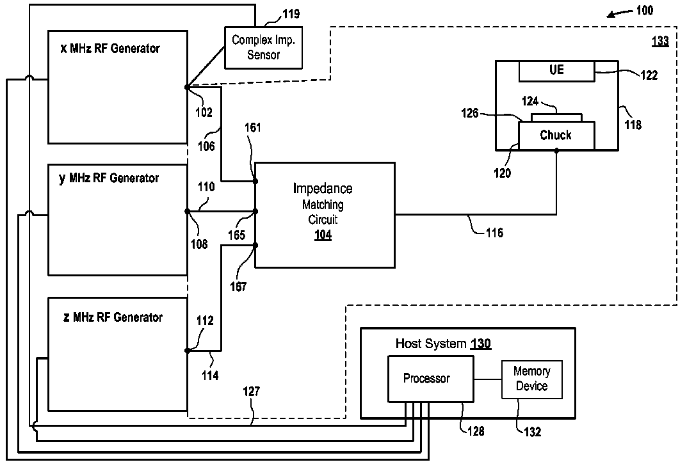

(51) **Int. Cl.**

H01J 37/32	(2006.01)
G05B 19/418	(2006.01)

(56) **References Cited**

U.S. PATENT DOCUMENTS

4,500,563	A	2/1985	Ellenberger et al.	
5,474,648	A	12/1995	Patrick et al.	
5,479,340	A	12/1995	Fox et al.	
5,556,549	A	9/1996	Patrick et al.	
5,689,215	A	11/1997	Richardson et al.	
5,737,177	A	4/1998	Mett et al.	
5,764,471	A	6/1998	Burkhart	
5,810,963	A	9/1998	Tomioka	
5,812,361	A	9/1998	Jones et al.	
5,866,985	A	2/1999	Coultas et al.	
5,889,252	A	3/1999	Williams et al.	
5,892,198	A	4/1999	Barnes et al.	
5,894,400	A	4/1999	Graven et al.	
5,980,767	A	11/1999	Koshimizu et al.	
6,020,794	A	2/2000	Wilbur	
6,042,686	A	3/2000	Dible et al.	
6,048,435	A	4/2000	DeOrnelias et al.	
6,110,214	A	8/2000	Klimasauskas	
6,198,616	B1	3/2001	Dahimene et al.	
6,246,972	B1	6/2001	Klimasauskas	
6,472,822	B1	10/2002	Chen et al.	
6,522,121	B2	2/2003	Coumou	
6,535,785	B2	3/2003	Johnson et al.	
6,597,002	B1	7/2003	Kondo	
6,669,783	B2	12/2003	Sexton et al.	
6,677,246	B2	1/2004	Scanlan et al.	
6,750,711	B2	6/2004	Chawla et al.	
6,823,815	B2	11/2004	Han et al.	
6,838,635	B2	1/2005	Hoffman et al.	
6,862,557	B2	3/2005	Jones et al.	
6,873,114	B2	3/2005	Avoyan et al.	
6,972,524	B1	12/2005	Marakhtanov et al.	
6,983,215	B2	1/2006	Coumou et al.	
7,042,311	B1	5/2006	Hilliker et al.	
7,122,965	B2	10/2006	Goodman	
7,169,625	B2	1/2007	Davis et al.	
7,323,116	B2	1/2008	Guiney et al.	
7,359,177	B2	4/2008	Yang et al.	
7,375,038	B2	5/2008	Kumar	
7,435,926	B2	10/2008	Jafarian-Tehrani	
7,459,100	B2	12/2008	Kiemasz et al.	
7,480,571	B2	1/2009	Howald et al.	
7,505,879	B2	3/2009	Tomoyasu et al.	
7,728,602	B2	6/2010	Valcore et al.	
7,768,269	B2	8/2010	Piptone et al.	
7,858,898	B2	12/2010	Bailey, III et al.	
7,967,944	B2	6/2011	Shannon et al.	
8,040,068	B2	10/2011	Coumou et al.	
8,080,168	B2	12/2011	Cirigliano	
8,080,760	B2	12/2011	Dhindsa et al.	
8,264,238	B1	9/2012	El-Chouelry	
8,271,121	B2	9/2012	Venugopal et al.	
8,368,308	B2	2/2013	Banna et al.	
8,404,598	B2	3/2013	Liao et al.	
8,501,631	B2	8/2013	Valcore et al.	
8,901,935	B2	12/2014	Valcore et al.	
2003/0082835	A1	5/2003	McChesney et al.	
2003/0103793	A1	6/2003	Murakoshi et al.	
2004/0028837	A1	2/2004	Fink	
2004/0045506	A1	3/2004	Chen et al.	
2004/0060660	A1	4/2004	Klimechy et al.	
2004/0061448	A1	4/2004	Avoyan et al.	
2004/0087047	A1	5/2004	Jaiswal et al.	
2004/0107906	A1	6/2004	Collins et al.	
2004/0135590	A1	7/2004	Quon	
2004/0222184	A1	11/2004	Hayami et al.	
2004/0226657	A1	11/2004	Hoffman	
2005/0090118	A1	4/2005	Shannon et al.	
2005/0133163	A1	6/2005	Shannon et al.	
2005/0134186	A1	6/2005	Brouk et al.	
2005/0151479	A1	7/2005	Avoyan et al.	
2005/0217797	A1	10/2005	Jafarian-Tehrani	
2005/0241762	A1	11/2005	Paterson et al.	
2005/0252884	A1	11/2005	Lam et al.	
2006/0065623	A1	3/2006	Guiney et al.	
2006/0065631	A1	3/2006	Cheng et al.	
2006/0065632	A1	3/2006	Cheng et al.	
2006/0088655	A1	4/2006	Collins et al.	
2006/0100824	A1	5/2006	Moriya	
2006/0169582	A1	8/2006	Brown et al.	
2006/0231526	A1	10/2006	Donohue	
2006/0232471	A1	10/2006	Coumou	
2007/0021935	A1	1/2007	Larson et al.	
2007/0065594	A1	3/2007	Chiang et al.	
2007/0127188	A1 *	6/2007	Yang et al.	361/234
2007/0247074	A1	10/2007	Paterson et al.	
2007/0252580	A1	11/2007	Dine et al.	
2007/0262723	A1	11/2007	Ikenouchi	
2009/0151871	A1	6/2009	Pease et al.	
2009/0284156	A1	11/2009	Banna et al.	
2009/0294061	A1	12/2009	Shannon et al.	
2009/0295296	A1	12/2009	Shannon et al.	
2010/0099266	A1	4/2010	Oswald et al.	
2010/0270141	A1	10/2010	Carter et al.	
2011/0031216	A1	2/2011	Liao et al.	
2011/0097901	A1	4/2011	Banna et al.	
2011/0115492	A1	5/2011	Valcore, Jr. et al.	
2011/0118863	A1	5/2011	Valcore, Jr.	
2011/0137446	A1	6/2011	Valcore, Jr. et al.	
2012/0073754	A1	3/2012	De la Llera et al.	

FOREIGN PATENT DOCUMENTS

JP	2004-335594	A	11/2004
JP	2005130198		5/2005
JP	2005284046	A	10/2005
KR	10-2005-0088438	A	9/2005
KR	10-2005-0089995	A	9/2005
KR	10-2007-0031915	A	3/2007
WO	2008002938	A2	1/2008
WO	2012054306	A2	4/2012

OTHER PUBLICATIONS

"Electromagnetic Waves and Antennas", Sophocles J. Orfanidis, Rutgers University, Aug. 25, 2013, Chapter 10.10.

Damon et al., "Synchronous Pulsed Plasma for Silicon Etch Applications", ECS Transactions, 27 (1) pp. 717-723 (2010), Publication by: The Electrochemical Society.

PCT/US2010/057478 International Search Report and Written Opinion, mailed Jul. 26, 2011 (6 pages).

PCT/US2011/063422 International Search Report and Written Opinion, mailed Mar. 28, 2012 (9 pages).

PCT/US2010/057450 International Search Report and Written Opinion, mailed Jul. 18, 2011 (9 pages).

PCT/IB2013/051010 International Search Report and Written Opinion, mailed Jul. 3, 2013 (13 pages).

* cited by examiner

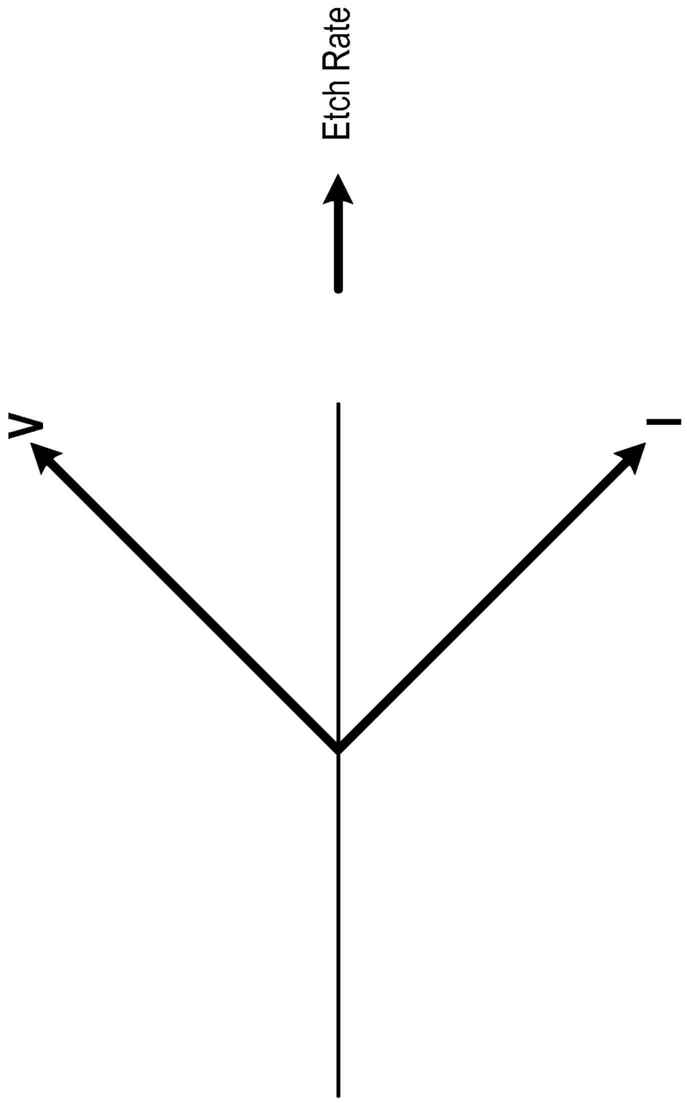
Etch Rate
V
I

FIG. 1

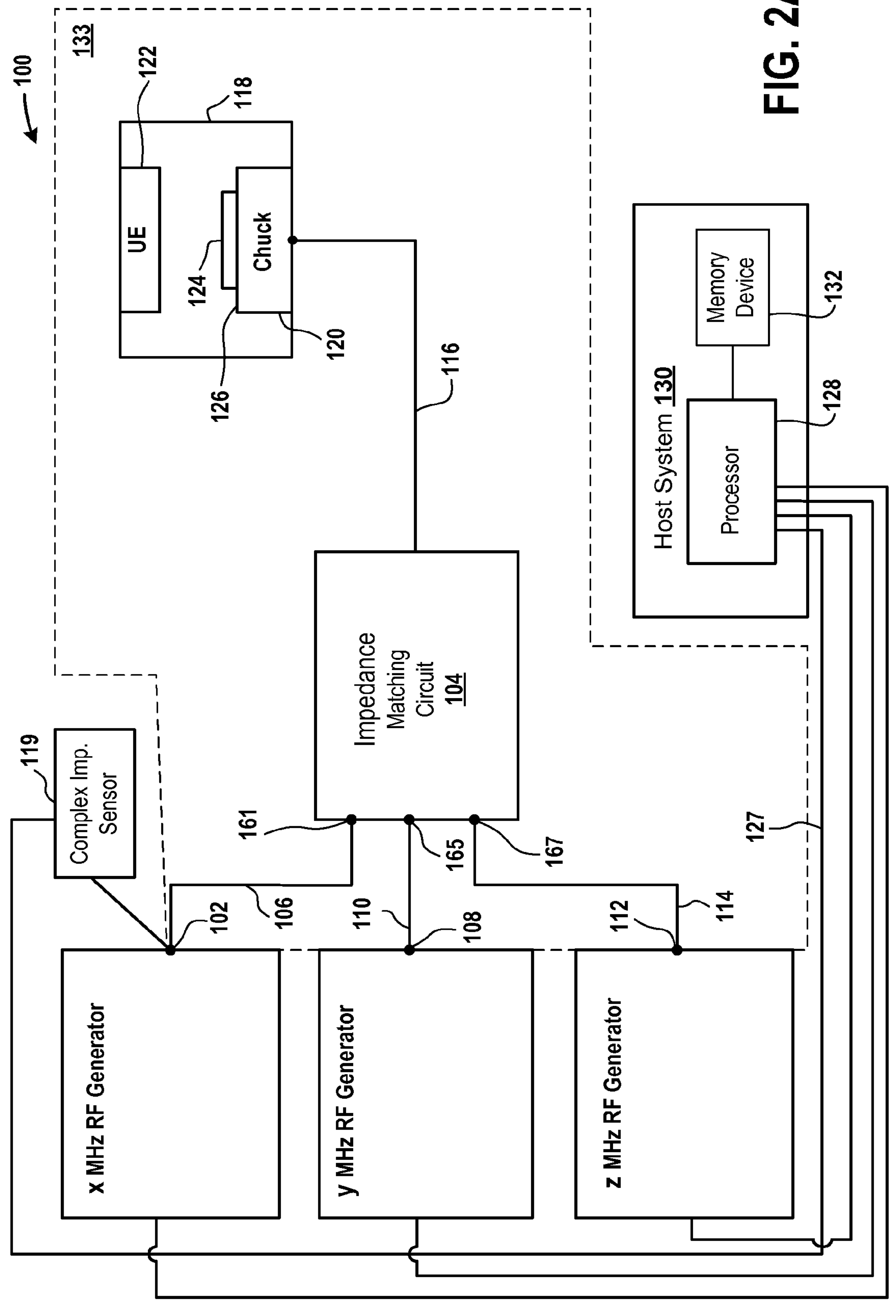
UE
Chuck
Host System 130
Memory Device
Processor
Impedance Matching Circuit 104
Complex Imp. Sensor
x MHz RF Generator
y MHz RF Generator
z MHz RF Generator

FIG. 2A

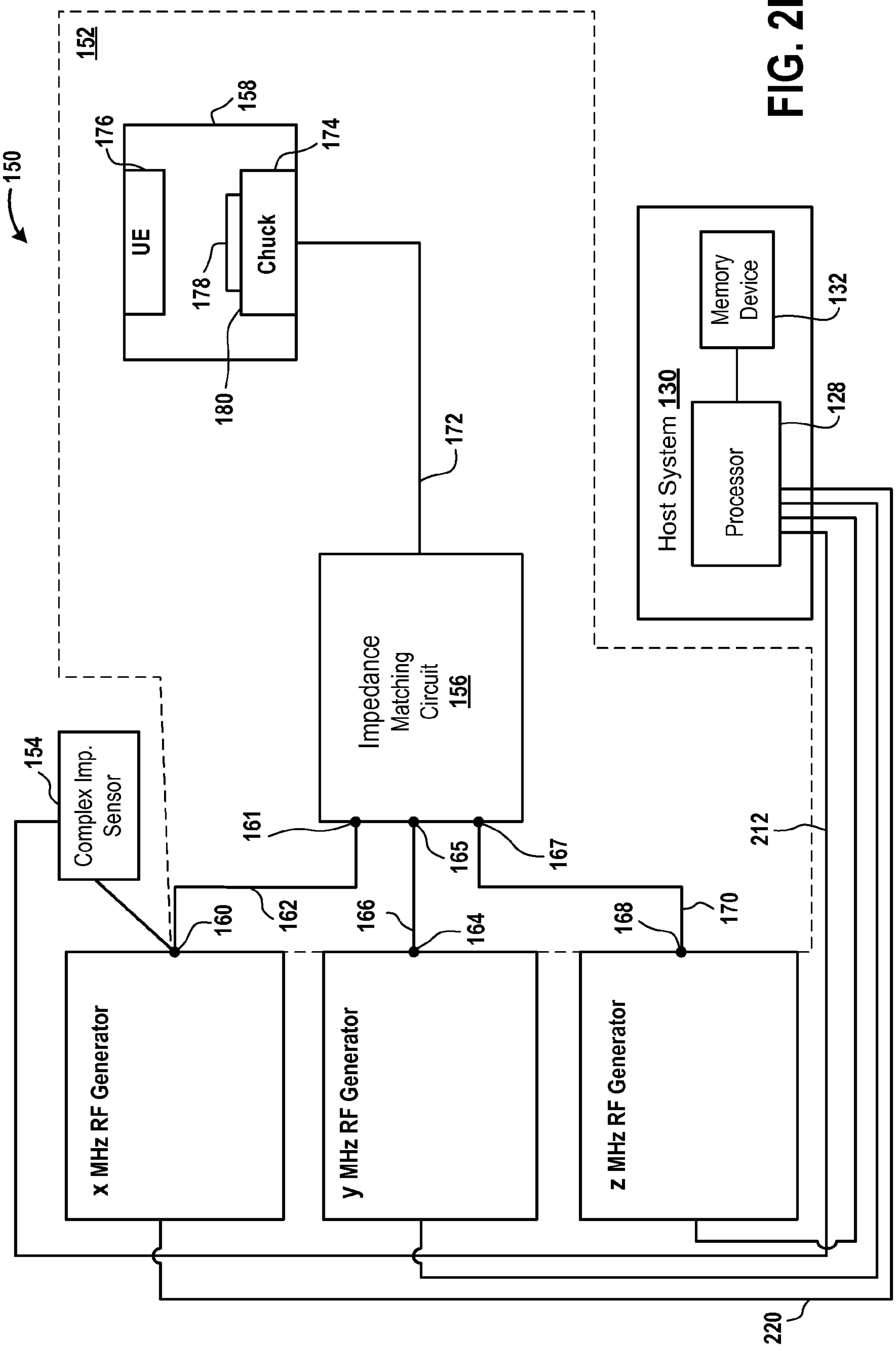
UE
Chuck
Host System 130
Memory Device
Processor
Impedance Matching Circuit 156
Complex Imp. Sensor
x MHz RF Generator
y MHz RF Generator
z MHz RF Generator

FIG. 2B

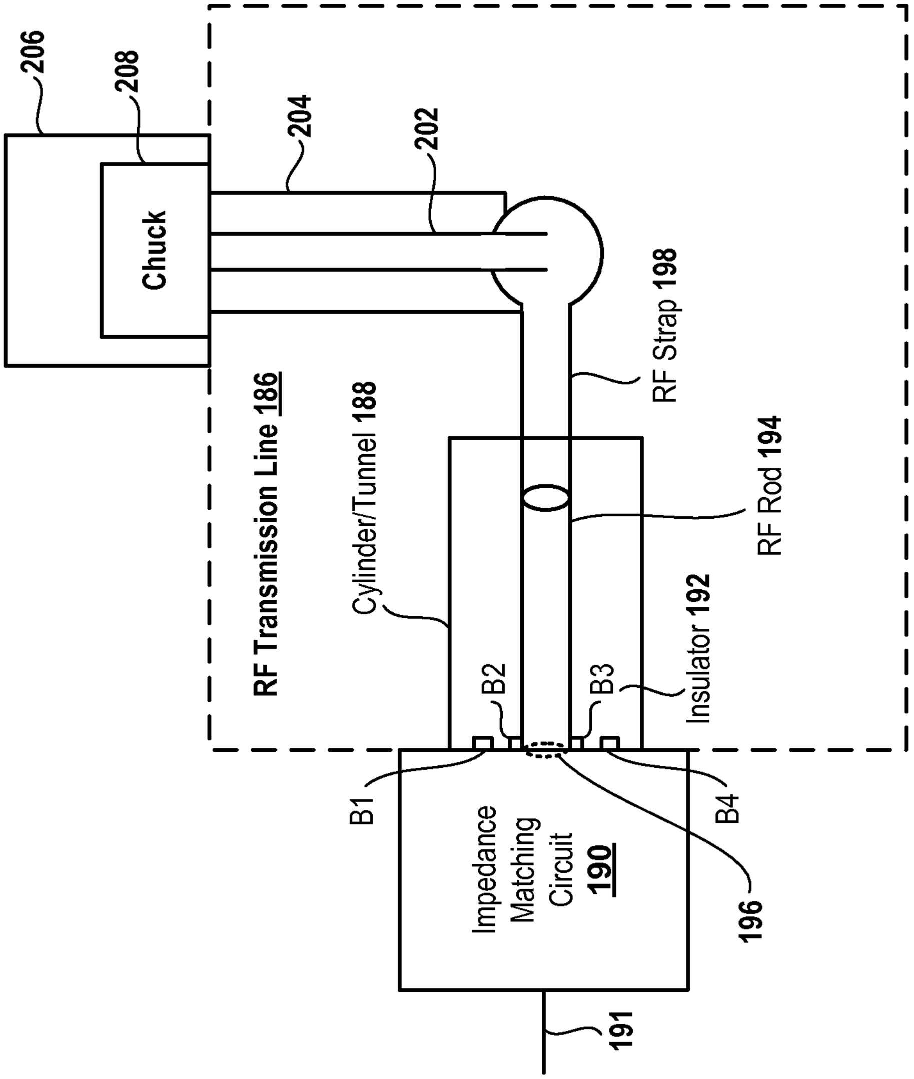
206
208
Chuck
204
202
RF Strap 198
RF Transmission Line 186
Cylinder/Tunnel 188
RF Rod 194
Insulator 192
B2
B3
B1
B4
Impedance Matching Circuit 190
196
191

FIG. 3

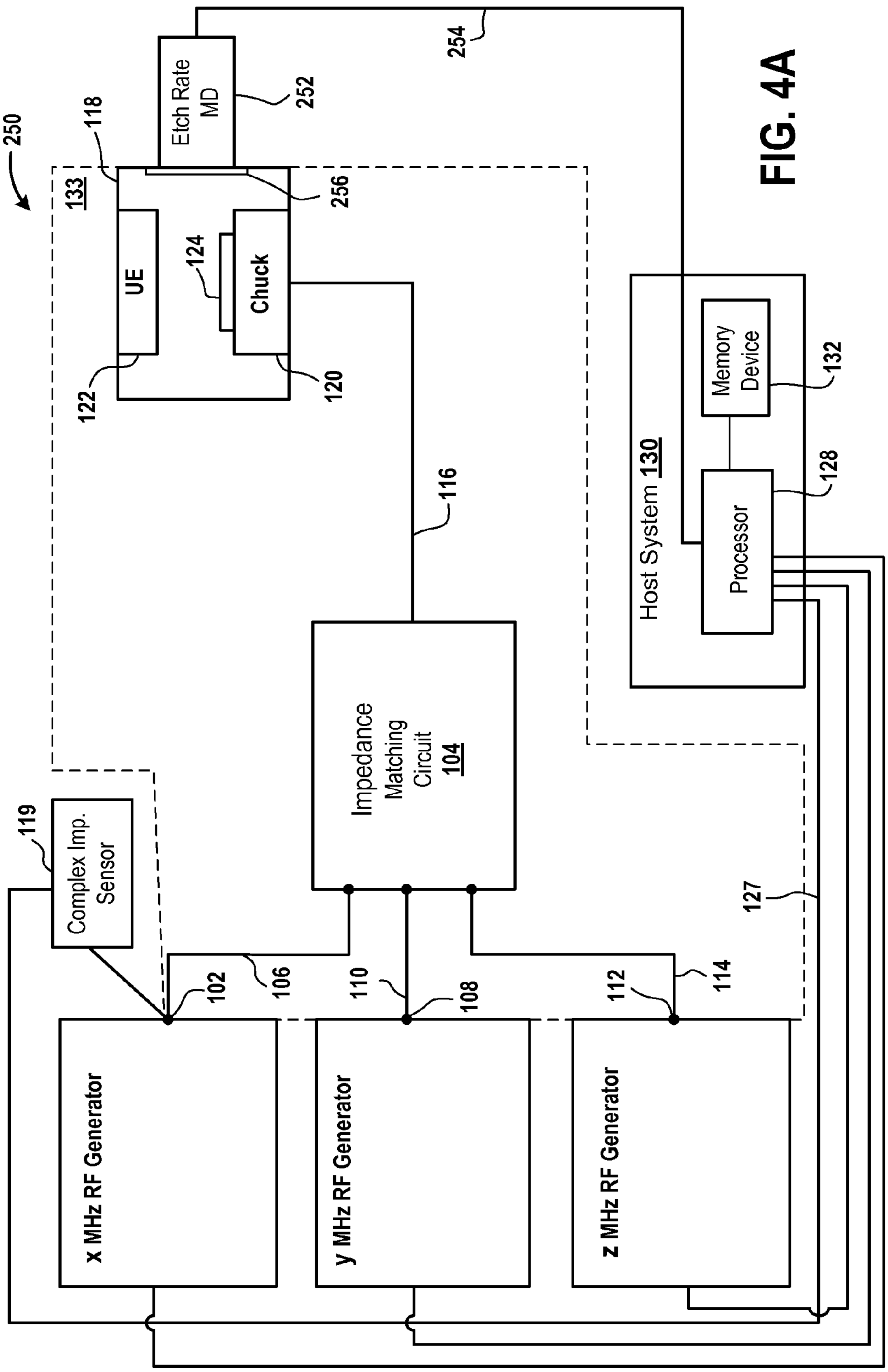
Etch Rate MD
UE
Chuck
Host System 130
Memory Device
Processor
Impedance Matching Circuit 104
Complex Imp. Sensor
x MHz RF Generator
y MHz RF Generator
z MHz RF Generator

FIG. 4A

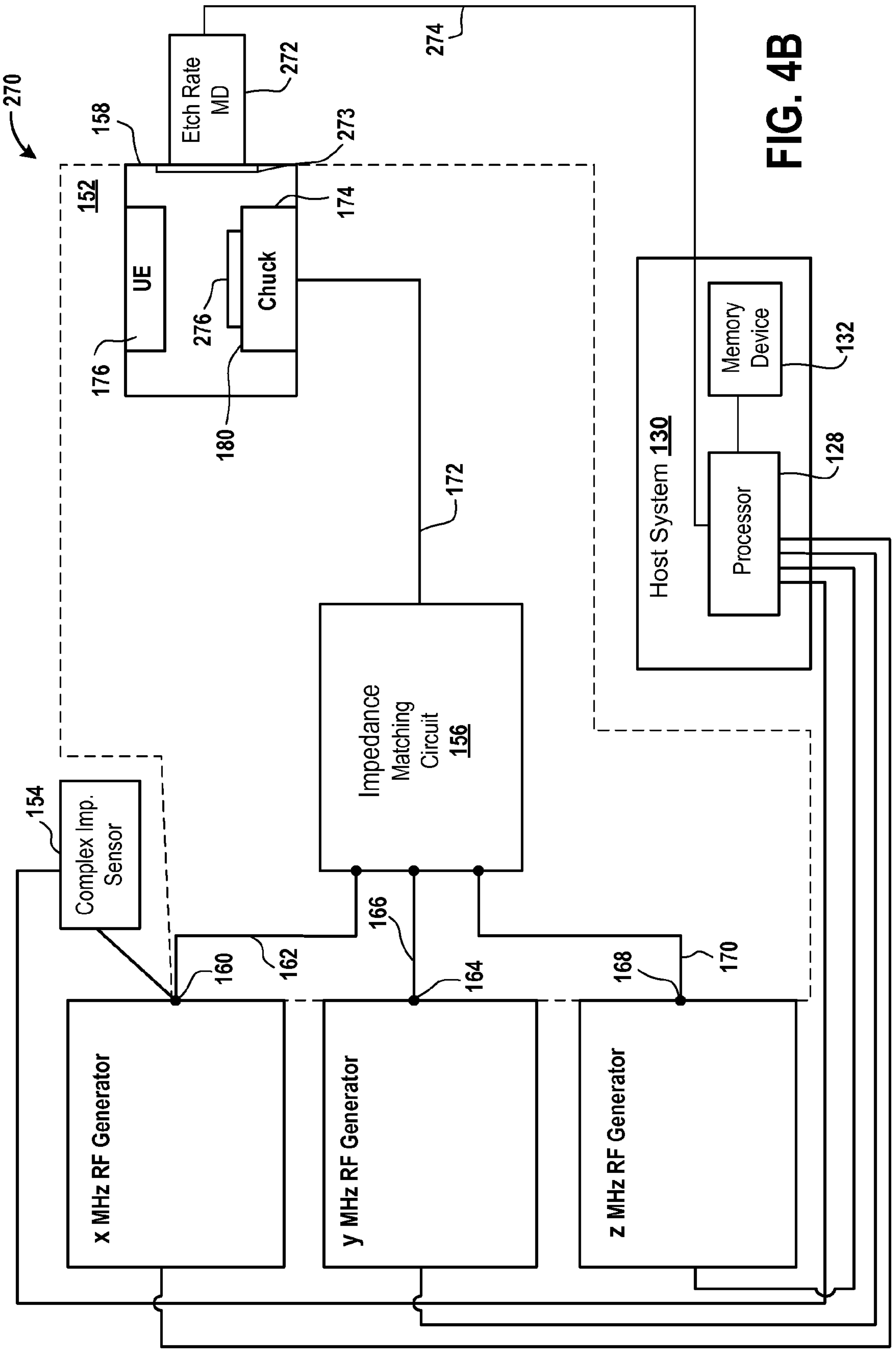
Etch Rate MD
UE
Chuck
Host System 130
Memory Device
Processor
Impedance Matching Circuit 156
Complex Imp. Sensor
x MHz RF Generator
y MHz RF Generator
z MHz RF Generator

FIG. 4B

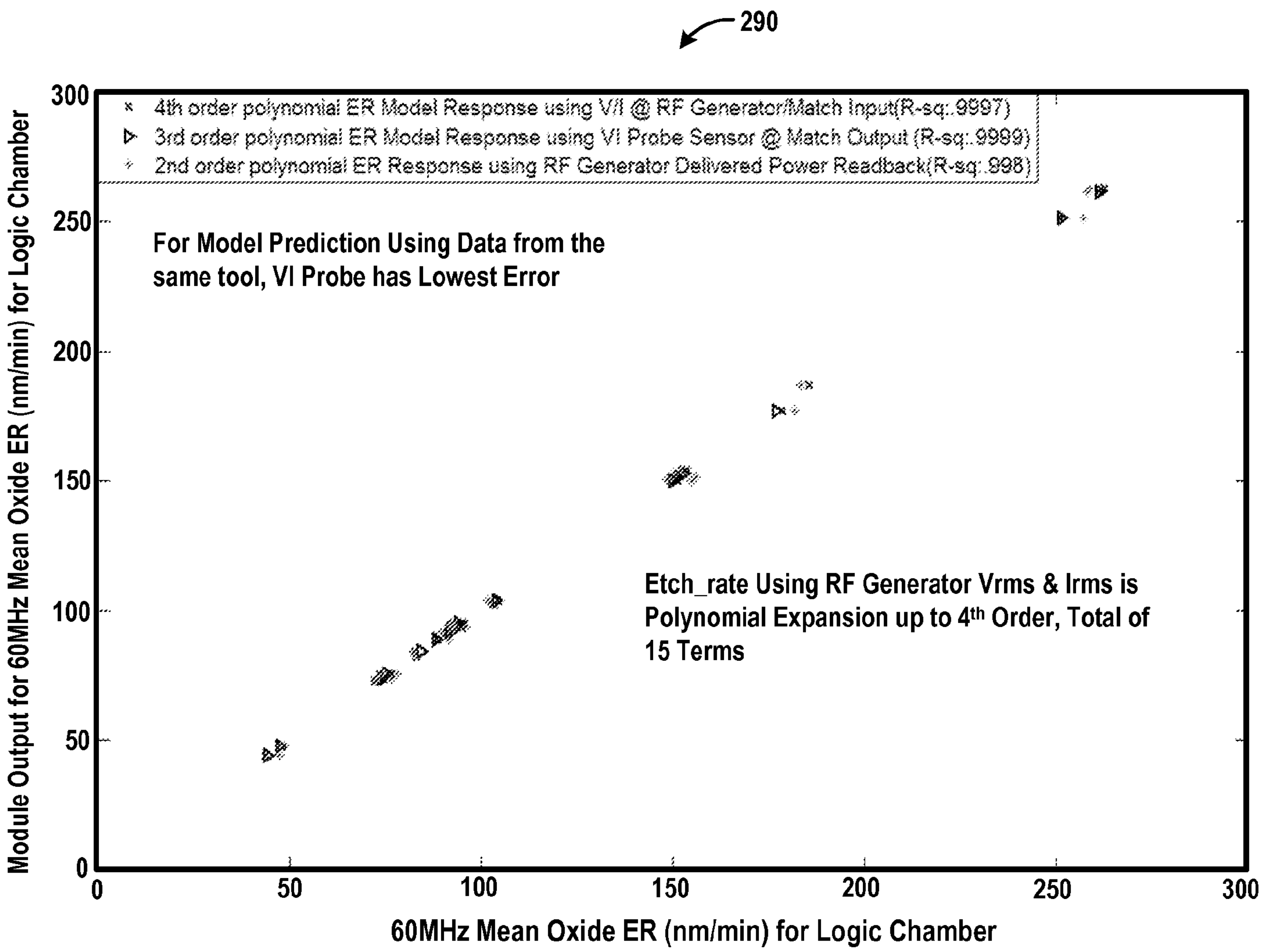
290
× 4th order polynomial ER Model Response using V/I @ RF Generator/Match Input(R-sq:.9997)
▷ 3rd order polynomial ER Model Response using VI Probe Sensor @ Match Output (R-sq:.9999)
✧ 2nd order polynomial ER Response using RF Generator Delivered Power Readback(R-sq:.998)
For Model Prediction Using Data from the same tool, VI Probe has Lowest Error
Etch_rate Using RF Generator Vrms & Irms is Polynomial Expansion up to 4th Order, Total of 15 Terms
Module Output for 60MHz Mean Oxide ER (nm/min) for Logic Chamber
0
50
100
150
200
250
300
60MHz Mean Oxide ER (nm/min) for Logic Chamber
0
50
100
150
200
250
300

FIG. 5

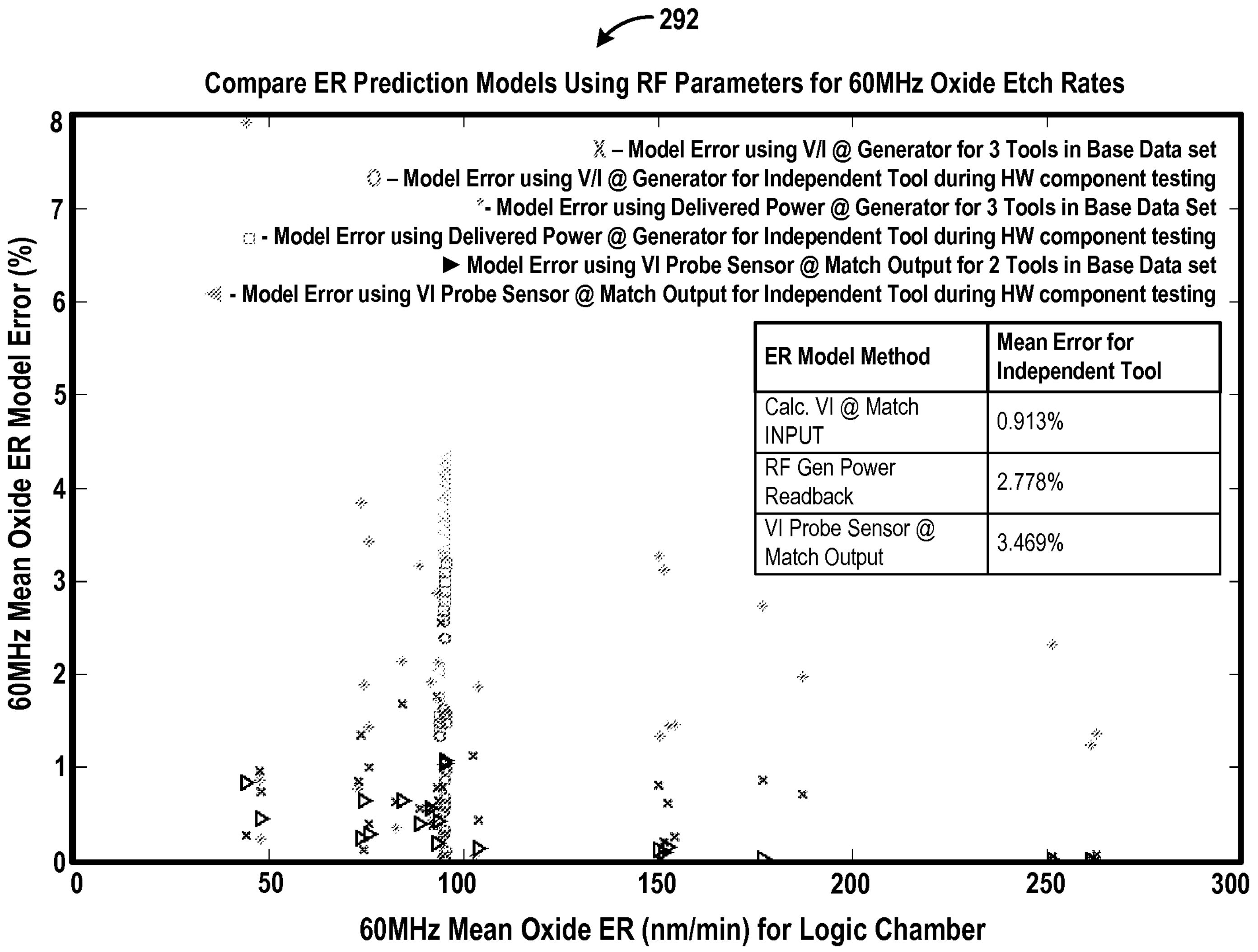

ER Model Method	Mean Error for Independent Tool
Calc. VI @ Match INPUT	0.913%
RF Gen Power Readback	2.778%
VI Probe Sensor @ Match Output	3.469%

FIG. 6

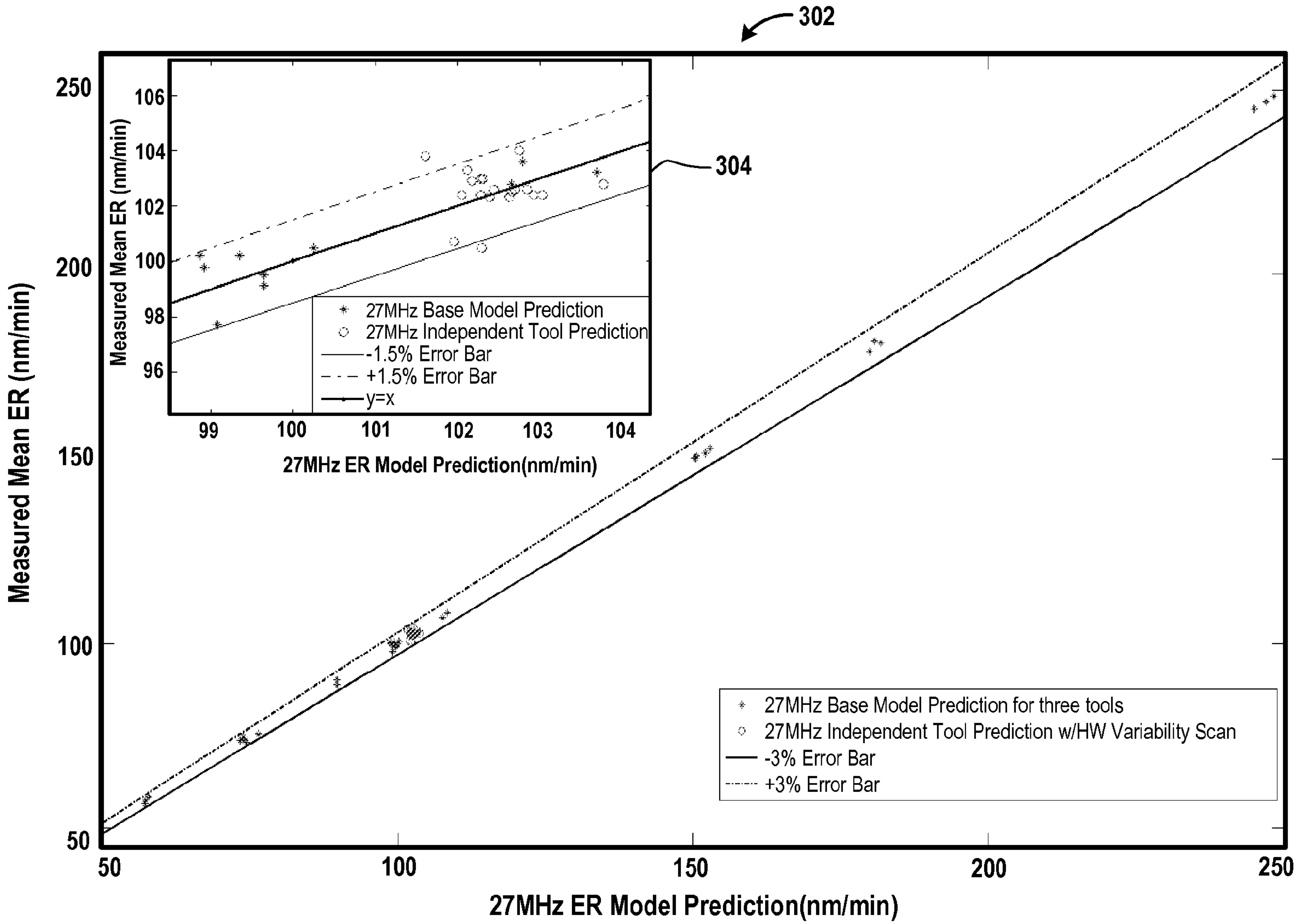
302
304
Measured Mean ER (nm/min)
27MHz ER Model Prediction(nm/min)
50
100
150
200
250
50
100
150
200
250
27MHz Base Model Prediction for three tools
27MHz Independent Tool Prediction w/HW Variability Scan
-3% Error Bar
+3% Error Bar
Measured Mean ER (nm/min)
27MHz ER Model Prediction(nm/min)
96
98
100
102
104
106
99
100
101
102
103
104
27MHz Base Model Prediction
27MHz Independent Tool Prediction
-1.5% Error Bar
+1.5% Error Bar
y=x

FIG. 7A

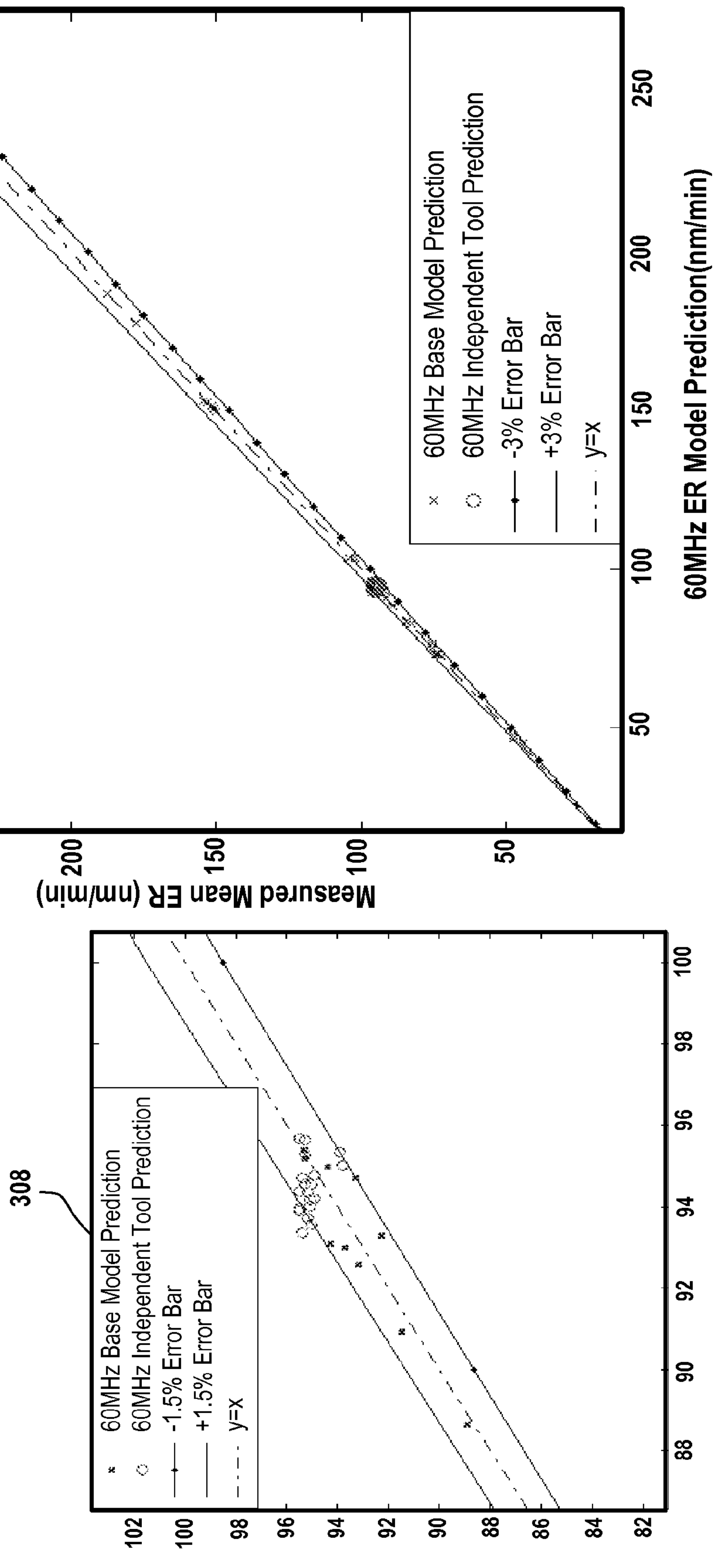
306
60MHz Base Model Prediction
60MHz Independent Tool Prediction
-3% Error Bar
+3% Error Bar
y=x
Measured Mean ER (nm/min)
60MHz ER Model Prediction(nm/min)
50
100
150
200
250
50
100
150
200
250
308
60MHz Base Model Prediction
60MHz Independent Tool Prediction
-1.5% Error Bar
+1.5% Error Bar
y=x
82
84
86
88
90
92
94
96
98
100
102
88
90
92
94
96
98
100

FIG. 7B

ETCH RATE MODELING AND USE THEREOF FOR IN-CHAMBER AND CHAMBER-TO-CHAMBER MATCHING

CROSS-REFERENCE TO RELATED APPLICATIONS

This application is related to U.S. patent application Ser. No. 14/243,705, filed on Apr. 2, 2014, and titled "Etch Rate Modeling and Use Thereof With Multiple Parameters For In-chamber and Chamber-to-Chamber Matching", which is incorporated by reference herein in its entirety.

CLAIM OF PRIORITY

The present patent application is a continuation of and claims the benefit of and priority, under 35 U.S.C. §120, to U.S. patent application Ser. No. 14/243,705, filed on Apr. 2, 2014, and titled "Etch Rate Modeling and Use Thereof With Multiple Parameters For In-chamber and Chamber-to-Chamber Matching", which claims the benefit of and priority, under 35 U.S.C. §119(e), to U.S. Provisional Patent Application No. 61/858,985, filed on Jul. 26, 2013, and titled "Etch Rate Modeling and Use Thereof For In-chamber and Chamber-to-Chamber Matching", both of which are incorporated by reference herein in their entirety for all purposes.

The present patent application claims the benefit of and priority, under 35 U.S.C. §119(e), to U.S. Provisional Patent Application No. 61/858,985, filed on Jul. 26, 2013, and titled "Etch Rate Modeling and Use Thereof For In-chamber and Chamber-to-Chamber Matching", which is incorporated by reference herein in its entirety for all purposes.

FIELD

The present embodiments relate to etch rate modeling and use of the model for in-chamber matching and chamber-to-chamber matching.

BACKGROUND

Plasma chambers are used for a variety of processes, e.g., cleaning a wafer, depositing materials on a wafer, etc. Plasma is used to perform the processes. For example, a radio frequency (RF) generator generates an RF signal to transfer to a plasma chamber to generate plasma within the plasma chamber. The RF generator may be a 2 megahertz (MHz) RF generator, a 27 MHz RF generator, or a 60 MHz RF generator.

Another one of the processes includes etching a wafer. However, when a wafer is etched in a plasma chamber, rate of etching the wafer varies over time within the plasma chamber. For example, there is an 0.85% etch rate change when the 27 MHz RF generator is used to supply RF power to a plasma chamber to etch a wafer. As another example, there is a 1.08% etch rate change when the 60 MHz RF generator is used to supply RF power to a plasma chamber to etch a wafer.

Moreover, when a wafer is etched in multiple plasma chambers, different etch rates may be applied on the wafer. For example, there may be a 3.3% variability in etch rate chamber-to-chamber when the 27 MHz RF generator is used to supply RF power to a plasma chamber to etch a wafer. As another example, there may be a 4.8% variability in an etch rate chamber-to-chamber when the 60 MHz RF generator is used to supply RF power to a plasma chamber to etch a wafer.

It is in this context that embodiments described in the present disclosure arise.

SUMMARY

Embodiments of the disclosure provide apparatus, methods and computer programs for etch rate modeling and use of the model for in-chamber matching and chamber-to-chamber matching. It should be appreciated that the present embodiments can be implemented in numerous ways, e.g., a process, an apparatus, a system, a device, or a method on a computer-readable medium. Several embodiments are described below.

In some embodiments, an etch rate is modeled to facilitate chamber-to-chamber matching and/or in-chamber matching of etch rates. For example, an etch rate is determined as a function of coefficients and voltages and/or currents. The determined etch rate is used to maintain a constant etch rate for a plasma system or across multiple plasma systems.

In various embodiments, a method for performing chamber-to-chamber matching of etch rates based on an etch rate model is described. The method includes receiving a voltage and a current measured at an output of a radio frequency (RF) generator of a first plasma system and calculating a sum of a first term, a second term, and a third term. The first term is a first product of a coefficient and a function of the voltage, the second term is a second product of a coefficient and a function of the current, and the third term is a third product of a coefficient, a function of the voltage, and a function of the current. The method further includes determining the sum to be the etch rate associated with the first plasma system, and adjusting power output from an RF generator of a second plasma system to achieve the etch rate associated with the first plasma system. The method is executed by a processor.

In several embodiments, a method for performing in-chamber matching of etch rates based on an etch rate model is described. The method includes receiving a voltage and a current measured at a first time at an output of an RF generator of a plasma system and calculating a sum of a first term, a second term, and a third term. The first term is a first product of a coefficient and a function of the voltage, the second term is a second product of a coefficient and a function of the current, and the third term is a third product of a coefficient, a function of the voltage, and a function of the current. The method further includes determining the sum to be the etch rate associated with the plasma system, and adjusting power output at a second time from the RF generator of the plasma system to achieve the etch rate. The method is executed by a processor.

In some embodiments, a plasma system for modeling an etch rate is described. The first plasma system includes an RF generator for generating an RF signal. The RF generator includes an output for facilitating transfer of the RF signal. The first plasma system further includes a complex impedance sensor coupled to the output for measuring a complex voltage and current of the RF signal, a plasma chamber for generating plasma when the RF signal is received, and an impedance matching circuit coupled to the RF generator via a cable and coupled to the plasma chamber via an RF transmission line. The first plasma system includes a processor coupled to the complex impedance sensor for receiving the measurement of the complex voltage and current from the complex impedance sensor. The processor is used for receiving a voltage and a current measured at an output of an RF generator of a second plasma system and calculating a sum of a first term, a second term, and a third term. The first term is a first product of a coefficient and a function of the voltage measured at the output of the RF generator of the second plasma system. The second term is a second product of a coefficient and a function of the current measured at the output of the RF generator of the second plasma system. The third term is a third product of a coefficient, a function of the voltage measured at the output of the RF generator of the second plasma system, and a function of the current measured at the output of the RF generator of the second plasma system. The processor is further used for determining the sum to be the etch rate associated with the second plasma system, and adjusting power measured at the output of the RF generator of the first plasma system to achieve the etch rate associated with the second plasma system. The adjustment of power is done based on the complex voltage and current.

Some advantages of the above-described embodiments include providing a model of an etch rate. For example, the etch rate is determined as a function of coefficients and voltages and/or currents. As another example, the etch rate is determined as a sum of products of coefficients and functions of a voltage, or functions of a current, or a combination of functions of the voltage and functions of the current. The model is feasible and uses less computation time of a processor and less resources, e.g., number of etch rate measurement devices (ERMDs), etc., to maintain etch rates. For example, it is not necessary to use an ERMD to measure an etch rate to achieve etch rate uniformity in-chamber. As another example, it is not necessary to use multiple ERMDs in multiple plasma systems, e.g., chamber-to-chamber, etc., to achieve etch rate uniformity while processing a semiconductor substrate. Also, the in-chamber or chamber-to-chamber uniformity in etch rates provides a certainty in etch rates independent of a time at which the voltage and/or current is supplied by the RF generator in the plasma system to etch a wafer.

Other aspects will become apparent from the following detailed description, taken in conjunction with the accompanying drawings.

BRIEF DESCRIPTION OF THE DRAWINGS

The embodiments may best be understood by reference to the following description taken in conjunction with the accompanying drawings.

FIG. **1** is a diagram used to illustrate that a model etch rate is a function of voltage and current, in accordance with some embodiments described in the present disclosure.

FIG. **2**A is a diagram of an embodiment of a plasma system used to determine a model etch rate, in accordance with some embodiments described in the present disclosure.

FIG. **2**B is a diagram of an embodiment of a plasma system that includes a tool of the same or similar type as that of a tool of the plasma system of FIG. **2**A, in accordance with various embodiments described in the present disclosure.

FIG. **3** is a diagram of an embodiment of a structure of a radio frequency (RF) transmission line, in accordance with several embodiments described in the present disclosure.

FIG. **4**A is a block diagram of an embodiment of a plasma system for determining coefficients of voltage and current used to determine an etch rate, in accordance with some embodiments described in the present disclosure.

FIG. **4**B is a block diagram of an embodiment of another plasma system for determining coefficients of voltage and current used to determine an etch rate, in accordance with various embodiments described in the present disclosure.

FIG. **5** is an embodiment of a graph that plots mean values of an etch rate model versus a mean value of measured etch rate, determined using an etch rate measurement device (ERMD), when a z megahertz (MHz) RF generator is operational and x and y MHz RF generators are nonoperational, in accordance with several embodiments described in the present disclosure.

FIG. **6** is an embodiment of a graph that plots an error in mean values of an etch rate model versus a mean etch rate when the z MHz RF generator is operational and the x and y MHz RF generators are nonoperational, in accordance with some embodiments described in the present disclosure.

FIG. **7**A shows embodiments of graphs that plot mean measured etch rates versus modeled etch rates to illustrate a generally linear relationship between the measured and modeled etch rates when a 27 megahertz RF generator is operational, in accordance with some embodiments described in the present disclosure.

FIG. **7**B shows embodiments of graphs that plot mean measured etch rates versus modeled etch rates to illustrate a generally linear relationship between the measured and modeled etch rates when a 60 megahertz RF generator is operational, in accordance with some embodiments described in the present disclosure.

DETAILED DESCRIPTION

The following embodiments describe systems and methods for chamber matching using a power control mode. It will be apparent that the present embodiments may be practiced without some or all of these specific details. In other instances, well known process operations have not been described in detail in order not to unnecessarily obscure the present embodiments.

FIG. **1** is a diagram used to illustrate that a model etch rate is a function of a voltage and/or current. In some embodiments, an etch rate is measured in terms of nanometers per minute. The voltage is measured at an output of a radio frequency (RF) generator and the current is measured at the output of the RF generator.

When one or more of the voltage and the current is changed, the model etch rate changes.

In some embodiments, the voltage is a voltage magnitude and the current is a current magnitude. Examples of a magnitude includes a zero-to-peak magnitude, a peak-to-peak magnitude, and a root mean square (RMS) magnitude.

FIG. **2**A is a diagram of an embodiment of a plasma system **100** used to determine a model etch rate. The plasma system **100** includes an x megahertz (MHz) radio frequency (RF) generator, a y MHz RF generator, and a z MHz RF generator. Examples of x MHz include 2 MHz, 27 MHz, and 60 MHz. Examples of y MHz include 2 MHz, 27 MHz, and 60 MHz. Examples of z MHz include 2 MHz, 27 MHz, and 60 MHz.

In some embodiments, the x MHz is different than y MHz and z MHz, and y MHz is different than z MHz. For example, when x MHz is 2 MHz, y MHz is 27 MHz and z MHz is 60 MHz.

It should be noted that in some embodiments, a complex impedance sensor connected to an output of an RF generator is calibrated to a level of accuracy. For example, a complex impedance sensor **119** coupled to an output **102** of the x MHz RF generator measures the same amount of voltage, the same amount of current, and/or the same amount of phase every time the measurement is taken at the output **102**. As another example, every time a measurement is taken at the output **102**, the complex impedance sensor **119** measures an amount of voltage that is within a threshold of a measurement of the voltage at the output **102**, and/or measures an amount of current at the output **102** that is within a threshold of a measurement of the current at the output **102**, and/or measures a phase at the output **102** that is within a threshold of a measurement of the phase at the output **102**. As yet another example, for a majority of times, a measurement is taken at the output **102**, the complex impedance sensor **119** measures the same amount of voltage, the same amount of current, and/or the same amount of phase every time the measurement is taken at the output **102**. As another example, for a majority of times, a measurement is taken at the output **102**, the complex impedance sensor **119** measures an amount of voltage that is within a threshold of a measurement of the voltage at the output **102**, and/or measures an amount of current at the output **102** that is within a threshold of a measurement of the current at the output **102**, and/or measures a phase at the output **102** that is within a threshold of a measurement of the phase at the output **102**.

In some embodiments, another complex impedance sensor (not shown) is coupled to the output **108** and yet another complex impedance sensor (not shown) is coupled to the output **112**.

In several embodiments, the terms complex impedance sensor and complex voltage and current sensor are used interchangeably.

It should be noted in a variety of embodiments, a phase is a phase between a voltage and a current. For example, when a voltage is V_m volts and current is I_m amperes, a phase between the voltage and current is Φ degrees, where m is an integer greater than zero.

In various embodiments, a complex impedance sensor used to calibrate the x, y, and z MHz RF generators follows a pre-set standard, e.g., a National Institute of Standards and Technology (NIST) standard. For example, a calibrated complex impedance sensor connected to an output of an RF generator is NIST traceable.

In a number of embodiments, any number of RF generators, e.g., two, four, etc., are used within the plasma system **100**.

An impedance matching circuit **104** is coupled to the output **102** via an RF cable **106**. Similarly, the impedance matching circuit **104** is coupled to an output **108** of the y MHz RF generator via an RF cable **110** and the impedance matching circuit **104** is coupled to an output **112** of the z MHz RF generator via an RF cable **114**. The impedance matching circuit **104** matches an impedance of a load coupled to the impedance matching circuit **104** at one side with an impedance of a source coupled to the impedance matching circuit **104** at another side. For example, the impedance matching circuit **104** matches an impedance of an RF transmission line **116** and a plasma chamber **118** with an impedance of the x MHz RF generator, the y MHz RF generator, the z MHz RF generator, the RF cable **106**, the RF cable **110**, and the RF cable **114**.

The plasma chamber **118** is coupled to the impedance matching circuit **104** via the RF transmission line **116**. The plasma chamber **118** includes a chuck **120**, an upper electrode **122**, and other parts (not shown), e.g., an upper dielectric ring surrounding the upper electrode **122**, an upper electrode extension surrounding the upper dielectric ring, a lower dielectric ring surrounding a lower electrode of the chuck **120**, a lower electrode extension surrounding the lower dielectric ring, an upper plasma exclusion zone (PEZ) ring, a lower PEZ ring, etc. The upper electrode **122** is located opposite to and facing the chuck **120**. A dummy wafer **124** is supported on an upper surface **126** of the chuck **120**. Each of the lower electrode and the upper electrode **122** is made of a metal, e.g., aluminum, alloy of aluminum, copper, etc. Examples of the chuck **120** include an electrostatic chuck (ESC) and a magnetic chuck.

In some embodiments, the dummy wafer **124** is used to determine an etch rate. For example, the dummy wafer **124** is made of a material other than a semiconductor. Examples of materials other than a semiconductor include glass, sodalime, borosilicate, quartz, ceramic, carbon fiber, etc. As another example, the dummy wafer **124** is cheaper than a semiconductor wafer.

In some embodiments, a semiconductor wafer is used instead of the dummy wafer **124**. Various processes, e.g., chemical vapor deposition, cleaning, deposition, sputtering, etching, ion implantation, resist stripping, etc., are performed on the semiconductor wafer during production. Integrated circuits, e.g., application specific integrated circuit (ASIC), programmable logic device (PLD), etc. are developed on the semiconductor wafer and the integrated circuits are used in a variety of electronic items, e.g., cell phones, tablets, smart phones, computers, laptops, networking equipment, etc.

The RF cables **106**, **110**, **114**, the impedance matching circuit **104**, the RF transmission line **116**, and the plasma chamber **118** are parts of a tool **133** of the plasma system **100**.

In some embodiments, the upper electrode **122** includes one or more gas inlets, e.g., holes, etc., that are coupled to a central gas feed (not shown). The central gas feed receives one or more process gases from a gas reservoir (not shown). An example of a process gas includes an oxygen-containing gas, such as O_2. Other examples of the process gas include a fluorine-containing gas, e.g., tetrafluoromethane (CF_4), sulfur hexafluoride (SF_6), hexafluoroethane (C_2F_6), etc. The upper electrode **122** is grounded. The chuck **120** is coupled to the x MHz RF generator, the y MHz RF generator, and the z MHz RF generator via the impedance matching circuit **104**.

When the process gas is supplied between the upper electrode **122** and the chuck **120** and when the x MHz RF generator and/or the y MHz RF generator and/or the z MHz RF generator supplies RF signals via the impedance matching circuit **104** and the RF transmission line **116** to the chuck **120**, the process gas is ignited to generate plasma within the plasma chamber **118**.

When the x MHz RF generator generates and provides an RF signal via the output **102**, the RF cable **106**, the impedance matching circuit **104**, and the RF transmission line **116** to the chuck **120** on which the dummy wafer **124** is placed, the complex impedance sensor **119** measures a complex voltage and current at the output **102**. In some embodiments, a complex voltage and current includes a voltage magnitude, a current magnitude, and a phase between the voltage magnitude and current magnitude. The complex voltage and current measured by the complex impedance sensor **119** is provided via a cable **127** to a processor **128** of a host system **130** for storage in a memory device **132** of the host system **130**. The processor **128** is coupled to the complex impedance sensor **119** via the cable **127**.

As used herein, a processor may be a central processing unit (CPU), a microprocessor, an application specific integrated circuit (ASIC), a programmable logic device (PLD), etc. Examples of a memory device include a read-only memory (ROM), a random access memory (RAM), or a combination thereof. A memory device may be a flash memory, a redundant array of storage disks (RAID), a hard disk, etc.

Similarly, the complex impedance sensors (not shown) coupled to the outputs **108** and **112** provides a measurement of a complex voltage and current via corresponding cables to the processor **128** for storage in the memory device **132**.

The processor **128** calculates an etch rate associated with the plasma system **100** based on a measurement at a time t_1 of a complex voltage and current received from the complex impedance sensor **119**. The measurement of the complex voltage and current is generated and received when the x MHz RF generator **162** supplies power via the output **102** to the plasma chamber **118**. The processor **128** generates a model etch rate based on the measured complex voltage and current.

For example, the processor **128** calculates a sum of a number of terms to determine a model etch rate associated with the plasma system **100**. Each term is a product of a coefficient and a function of the voltage measured at the time t_1, or a product of a coefficient and a function of the current measured at the time t_1, or a product of a coefficient, a function of the voltage measured at the time t_1, and a function of the current measured at the time t_1. As an example, the processor **128** calculates a model etch rate ER**1001** as being equal to $C_{11}V_1+C_{12}I_1$, which is a polynomial of a first order, where each of $C_{11}V_1$ and $C_{12}I_1$ is a term, C_{11} and C_{12} are coefficients, V_1 is a voltage magnitude measured by the complex impedance sensor **119** at the time t_1, and I_1 is a current magnitude measured by the complex impedance sensor **119** at the time t_1. As another example, a model etch rate ER**1002** is calculated as $C_{21}V_1+C_{22}I_1+C_{23}V_1^2+C_{24}V_1I_1+C_{25}I_1^2$, which is a polynomial of a second order, where each of $C_{21}V_1$, $C_{22}I_1$, $C_{23}V_1^2$, $C_{24}V_1I_1$, and $C_{25}I_1^2$ is a term, C_{21}, C_{22}, C_{23}, C_{24}, and C_{25} are coefficients, where I_1^2 is a function, having a power of 2, of the current I_1, where V_1^2 is a function, having a power of 2, of the voltage V_1. As yet another example, a model etch rate ER**1003** is calculated as $C_{31}V_1+C_{32}I_1+C_{33}V_1^2+C_{34}V_1I_1+C_{35}I_1^2+C_{36}V_1^3+C_{37}V_1^2I_1+C_{38}V_1I_1^2+C_{39}I_1^3$, which is a polynomial of a third order, where each of $C_{31}V_1$, $C_{32}I_1$, $C_{33}V_1^2$, $C_{34}V_1I_1$, $C_{35}I_1^2$, $C_{36}V_1^3$, $C_{37}V_1^2I_1$, $C_{38}V_1I_1^2$, and $C_{39}I_1^3$ is a term, C_{31}, C_{32}, C_{33}, C_{34}, C_{35}, C_{36}, C_{37}, C_{38}, and C_{39} are coefficients, I_1^3 is a function, having a power of 3, of the current I, and V_1^3 is a function, having a power of 3, of the voltage V_1. As another example, a model etch rate ER**1004** is calculated as $C_{41}V_1+C_{42}I_1+C_{43}V_1^2+C_{44}V_1I_1+C_{45}I_1^2+C_{46}V_1^3+C_{47}V_1^2I+C_{48}V_1I_1^2+C_{49}I_1^3+C_{50}V_1^4+C_{51}V_1^3I_1+C_{52}V_1^2I_1^2+C_{53}V_1I_1^3+C_{54}I_1^4$, which is a polynomial of a fourth order, where each of $C_{41}V_1$, $C_{42}I_1$, $C_{43}V_1^2$, $C_{44}V_1I_1$, $C_{45}I_1^2$, $C_{46}V_1^3$, $C_{47}V_1^2I$, $C_{48}V_1I_1^2$, $C_{49}I_1^3$, $C_{50}V_1^4$, $C_{51}V_1^3I_1$, $C_{52}V_1^2I_1^2$, $C_{53}V_1I_1^3$, and $C_{54}I_1^4$ is a term, C_{41}, C_{42}, C_{43}, C_{44}, C_{45}, C_{46}, C_{47}, C_{48}, C_{49}, C_{50}, C_{51}, C_{52}, C_{53}, and C_{54} are coefficients, I_1^4 is a function, having a power of 4, of the current I_1, and V_1^4 is a function, having a power of 4, of the voltage V_1.

It should be noted that V_m is a voltage magnitude, e.g., a zero-to-peak voltage, a peak-to-peak voltage, a root mean square (RMS) voltage, etc., and I_m is a current magnitude, e.g., a zero-to-peak current, a peak-to-peak current, an RMS current, etc., where "m" is an integer greater than zero. It should be noted that in some embodiments, each of the first order polynomial, the second order polynomial, the third order polynomial, and the fourth order polynomial is a portion of a Taylor series expansion. As an example, the processor **128** calculates an etch rate model ER**100*n*** as being equal to a Taylor series expansion, which is also an nth order polynomial, of a function of the voltage V_1, a function of the current I_1, and a coefficient, where n is an integer. To illustrate, the processor **128** calculates the etch rate ER**100*n*** as the nth order polynomial that converges to a value, where n is an integer greater than zero.

In various embodiments, a number of terms in an etch rate model ranges from one to a large number, e.g., 100, 1000, 10000, etc. For example, the etch rate ER**1001** includes two terms, the etch rate ER**1002** includes five terms, the etch rate ER**1003** includes nine terms, and the etch rate ER**1004** includes 14 terms.

In a number of embodiments, a number of terms used to determine an etch rate model associated with a plasma system is provided as an input by a user via an input device (not shown), e.g., a mouse, a keyboard, a stylus, a touchscreen, etc., that is coupled to the processor **128**. In various embodiments, the processor **128** determines a number of terms used to determine an etch rate model associated with a plasma system to achieve convergence in a value of the etch rate model. For example, the processor **128** continues to add terms used in determining an etch rate model associated with a plasma system until a convergence in the etch rate model is achieved.

In various embodiments, the processor **128** receives coefficients, e.g., the coefficients C_{11}, C_{12}, C_{21}, C_{22}, C_{23}, C_{24}, C_{25}, C_{31}, C_{32}, C_{33}, C_{34}, C_{35}, C_{36}, C_{37}, C_{38}, C_{39}, C_{41}, C_{42}, C_{43}, C_{44}, C_{45}, C_{46}, C_{47}, C_{48}, C_{49}, C_{50}, C_{51}, C_{52}, C_{53}, C_{54}, etc., from another processor that determines the coefficients in the same manner in which the processor **128** determines the coefficients. A manner of determining the coefficients is described below.

In some embodiments, the tool **133** provides a higher yield among several tools of several plasma systems. The several tools are of the same or similar type as the tool **133**. For example, characteristics, e.g., a resistance, capacitance, inductance, or a combination thereof, etc., of the various corresponding tools is the same as or within a range of a characteristic of the tool **133**. As another example, the several tools have the same structure as that of and/or perform the same function as that performed by the tool **133**.

In various embodiments, the tool **133** has a higher yield than a tool of another plasma system that is of the same or similar type when the higher yielding tool is used to etch a wafer to achieve a higher aspect ratio than that achieved using the lower yielding tool, or when use of the higher yielding tool results in wafers that are cleaner than those cleaned using the lower yielding tool, or when the higher yielding tool etches at a faster rate than that achieved using the lower yielding tool, or when the higher yielding tool cleans wafers at a faster rate than that achieved using the lower yielding tool, or when the higher yielding tool has a higher rate of processing wafers than that of the lower yielding tool, or a combination thereof.

In various embodiments, the tool **133** is referred to as a golden tool.

In some embodiments, an etch rate associated with the plasma system **100** is maintained constant over time. For example, when there is a variation in the voltage V_1 and/or a variation in the current I_1 at a time t_2, the x MHz RF generator adjusts power, e.g., a combination of V_1 and I_1, etc., delivered via the output **102** of the x MHz RF generator to maintain the etch rate associated with the plasma system **100**. The time t_2 is after the time t_1. The variation in the voltage V_1 and/or the variation in the current I_1 are received by the processor **128** from the complex impedance sensor **119**. As another example, when there is a variation in the voltage V_1 and/or a variation in the current I_1 at the time t_2, the x MHz RF generator adjusts the voltage V_1 and/or the current I_1 measured at the output **102** of the x MHz RF generator to maintain the etch rate associated with the plasma system **100**. As another example, after determining the etch rate ER**1001**, when there is a change in power of an RF signal supplied by the x MHz RF generator, the x MHz RF generator adjusts the power to achieve the etch rate ER**1001**. As another example, when there is a fluctuation in power delivered by the x MHz RF generator to the plasma chamber **118**, the x MHz RF generator adjusts the power to achieve the etch rate ER**1001**.

In various embodiments, after determining the etch rate associated with the plasma system **100** using the dummy wafer **124**, the dummy wafer **124** is replaced with a semiconductor wafer for etching the semiconductor wafer. One or more of the x, y, and z MHz RF generators supply RF power via the corresponding outputs **102**, **108**, and **112**, via the corresponding RF cables **106**, **108**, and **114**, via the impedance matching circuit **104**, via the RF transmission line **116** to the chuck **120** when a semiconductor wafer is placed on the top surface **126** of the chuck **120**. When the RF power is supplied by the x MHz RF generator, the complex impedance sensor **119** measures a complex voltage and current at the output **102** at the time t_2.

In some embodiments, the processor **128** of the host system **130** maintains a recipe over time for generating plasma within the plasma chamber **118** during times the etch rate associated with the plasma system **100** is determined and the constant etch rate is maintained. For example, the processor **128** maintains as constant a pressure within the plasma chamber **118**, and/or a temperature within the plasma chamber **118**, and/or a frequency of the x MHz RF generator, and/or a frequency of the y MHz RF generator, and/or a frequency of the z MHz RF generator, and/or a gap between the upper electrode **122** and the chuck **120**, and/or a chemistry of one or more process gases within the plasma chamber **118**. As another example, the processor **128** maintains as constant a pressure within the plasma chamber **118** and/or a temperature within the plasma chamber **118** and/or a gap between the upper electrode **122** and the chuck **120** and/or a chemistry of one or more process gases within the plasma chamber **118**. As another example, the processor **128** maintains similar pressures within the plasma chamber **118** and/or similar temperatures within the plasma chamber **118** and/or similar frequencies of the x MHz RF generator and/or similar frequencies of the y MHz RF generator and/or similar frequencies of the z MHz RF generator and/or similar gaps between the upper electrode **122** and the chuck **120** and/or similar chemistries of one or more process gases within the plasma chamber **118**. As another example, the processor **128** maintains similar pressures within the plasma chamber **118** and/or similar temperatures within the plasma chamber **118** and/or similar gaps between the upper electrode **122** and the chuck **120** and/or similar chemistries of one or more process gases within the plasma chamber **118**.

In some embodiments, similar pressures are maintained within the plasma chamber **118** when a first one of the pressures is within a range of a second one of the pressures. In various embodiments, similar temperatures are maintained within the plasma chamber **118** when a first one of the temperatures is within a range of a second one of the temperatures. In various embodiments, similar frequencies of an RF generator are maintained when a first one of the frequencies is within a range of a second one of the frequencies. In some embodiments, similar gaps are maintained within the plasma chamber **118** when a first one of the gaps is within a range of a second one of the gaps. In a variety of embodiments, similar chemistries are maintained within the plasma chamber **118** when an amount of each process gas is maintained within a pre-determined range and/or a combination of types of process gases is maintained within the plasma chamber **118**. In some embodiments, similar chemistries are maintained within the plasma chamber **118** when a combination of types of process gases is maintained within the plasma chamber **118**. Examples of types of a process gas include an oxygen containing gas, fluorine containing gas, etc. To illustrate a fluorine containing gas is of a different type than an oxygen containing gas. In some embodiments, a first process gas is of a different type than a second process gas when the first process gas includes a chemical element that is not included within the second process gas.

In various embodiments, the processor **128** controls a gas supply valve (not shown) that facilitates supply of a gas from a gas reservoir (not shown) to gas inlets of an upper electrode of a plasma chamber to control pressure within the plasma chamber. For example, the processor **128** controls a driver (not shown), e.g., a transistor, etc., that supplies a current to open or close the valve by an amount to control an amount of the process gas supplied to a plasma chamber. The control of the supply of the process gas also allows the processor **128** to control the pressure within a plasma chamber in which the gas is supplied.

In several embodiments, the processor **128** controls a number of gas supply valves (not shown) that facilitate supply of a number of process gases from a number of gas reservoirs (not shown) to gas inlets of an upper electrode of a plasma chamber to control chemistry within the plasma chamber. For example, the processor **128** controls a driver that supplies a current to open or close a valve by an amount to control an amount of the first process gas that is supplied from a first gas reservoir to gas inlets of the upper electrode **122** and controls another driver that supplies a current to open or close another valve by an amount to control an amount of the second process gas that is supplied from a second gas reservoir to the gas inlets. In various embodiments, the second process gas is different from the first process gas. For example, the first process gas is an oxygen-based process gas and the second process gas is a fluorine-based process gas. As another example, the first process gas is tetrafluoromethane and the second process gas is sulfur hexafluoride. As yet another example, the first process gas is of a different type than a type of the second process gas.

In some embodiments, a heater is included within a chuck of a plasma chamber and the heater is controlled by the processor **128** via a driver to change temperature within the plasma chamber.

In several embodiments, a heat transfer mechanism, e.g., a duct, etc., is provided within a plasma chamber and a flow of a cooling liquid within the heat transfer mechanism is controlled by the processor **128** via a valve and a driver to change temperature within the plasma chamber.

In various embodiments, an upper electrode of a plasma chamber is located within an upper structure (not shown) that is may be raised up or down using a motor-driven screw mechanism (not shown). The processor **128** controls the motor-driven screw mechanism via a driver to move the upper structure up or down to change the gap between the upper electrode and a chuck facing the upper electrode.

In some embodiments, the processor **128** sends a signal to a digital signal processor (DSP) of an RF generator via a cable to adjust a voltage and/or a current to achieve an etch rate. For example, the processor **128** sends a voltage magnitude of an RF signal to an RF generator. Upon receiving the signal, a digital signal processor (DSP) of the RF generator sends the voltage magnitude to a drive and amplifier system (DAS) of the RF generator. For example, a DSP of the RF generator receives the voltage magnitude and sends the voltage magnitude to a DAS of the RF generator. The DAS of the RF generator generates an RF signal having the voltage magnitude and to achieve the etch rate. The RF signal is supplied via an RF cable and the impedance matching circuit **104** and the RF transmission line **116** to the plasma chamber **118**.

It should be noted that in some embodiments, any number of RF generators are used in the plasma system **100**.

FIG. **2**B is a diagram of an embodiment of a plasma system **150** that includes a tool **152** of the same or similar type as that of the tool **133** (FIG. **2**A). An etch rate determined using the plasma system **100** (FIG. **2**A), e.g., an etch rate determined using voltage and/or current measured at the time t_1, is applied to the plasma system **150** to perform chamber-to-chamber matching of etch rates.

The plasma system **150** includes the x, y, and z MHz RF generators, a complex impedance sensor **154**, an impedance matching circuit **156**, and a plasma chamber **158**. An input **161** of impedance matching circuit **156** is coupled to the output **160** of the x MHz RF generator via an RF cable **162**, an input **165** of the impedance matching circuit **156** is coupled to an output **164** of the y MHz RF generator via an RF cable **166**, and an input **167** of the impedance matching circuit **156** is coupled to an output **168** of the z MHz RF generator via an RF cable **170**. The plasma chamber **158** is coupled to the impedance matching circuit **156** via an RF transmission line **172**.

The plasma chamber **158** includes a chuck **174**, an upper electrode **176**, and other parts, which are described above. The upper electrode **176** is located opposite to and facing the chuck **174** and is grounded. A work piece **178**, e.g., a semiconductor wafer, etc., is supported on an upper surface **180** of the chuck **174**. Various processes, which are described above, are performed on the work piece **178** during production. Integrated circuits are developed on the work piece **175** and the integrated circuits are used in a variety of electronic items, e.g., cell phones, tablets, smart phones, computers, laptops, networking equipment, etc. Each of the lower electrode of the plasma chamber **158** and the upper electrode **176** is made of a metal, e.g., aluminum, alloy of aluminum, copper, etc. The chuck **174** may be an ESC or a magnetic chuck.

In various embodiments, the plasma chamber **158** has the same structure as that of the plasma chamber **118** (FIG. **2**A). For example, the plasma chamber **158** includes structural elements that have same dimensions as that of corresponding structural elements in the plasma chamber **118**. As another example of the plasma chambers **118** and **158** having the same structure, the plasma chamber **158** includes structural elements that are of the same type as that of corresponding structural elements in the plasma chamber **118**. To illustrate, a transformer coupled plasma (TCP) chamber has one or more structural elements of a different type than one or more structural elements of an inductively coupled plasma (ICP) chamber and both the TCP and the ICP chambers have one or more structural elements of different types than one or more elements of an electron cyclotron resonance (ECR) plasma chamber. As another illustration, a plasma chamber that includes inductors as electrodes is of a different type than a plasma chamber that includes capacitors as electrodes.

Examples of structural elements of a plasma chamber include an upper electrode, a lower electrode, an upper plasma exclusion zone (PEZ) ring, a lower PEZ ring, a confinement ring assembly, an edge ring, an insulator layer, gas distribution apertures, walls of the plasma chamber, an upper dielectric ring surrounding the upper electrode, an upper electrode extension surrounding the upper dielectric ring, a lower dielectric ring surrounding the lower electrode, a heating element located within the upper electrode or the lower electrode, a cooling element located within the upper electrode or the lower electrode, a lower electrode extension surrounding the lower dielectric ring, etc. In various embodiments, the lower electrode and the lower electrode extension are made of a metal, e.g., anodized aluminum, alloy of aluminum, etc. Also, in some embodiments, the upper electrode and the upper electrode extension are made of a metal, e.g., aluminum, alloy of aluminum, etc. In several embodiments, the upper electrode is located opposite to and facing the lower electrode and the upper electrode extension is located opposite to and facing the upper electrode.

Examples of dimensions of a structural element include a size of the element, a length of the element, a depth of the element, a width of the elements, a surface area of the element, a volume occupied by the element, etc.

Examples of structural elements of different types include a plate electrode, an electric coil electrode, etc.

In various embodiments, the plasma chamber **158** is structurally identical to plasma chamber **118** and has a different identification code than that of the plasma chamber **118**. For example, an entity identifies the plasma chamber **158** using an identity code aaaa and the entity identifies the plasma chamber **118** using an identity code bbbb.

In a number of embodiments, the plasma chamber **158** is structurally identical to the plasma chamber **118** and is used to perform the same function as that of the plasma chamber **118**. As an example of the same function, the plasma chamber **158** has similar characteristics, e.g., capacitance, resistance, inductance, a combination thereof, etc., as that of the plasma chamber **118**. To illustrate, the plasma chamber **158** has an inductance within a range of inductance of the plasma chamber **118**. As another illustration, the plasma chamber **158** has a capacitance that is within a range of capacitance of the plasma chamber **118**. As yet another illustration, the plasma chamber **158** has a resistance within a range of a resistance of the plasma chamber **118**. As another illustration, the plasma chamber **158** has a combination of inductance, resistance, and capacitance that is within a range of combination of inductance, resistance, and capacitance of the plasma chamber **118**. Examples of a function performed by a plasma chamber include physical vapor deposition (PVD), chemical vapor deposition (CVD), plasma-enhanced CVD (PECVD), metal CVD, a high-density plasma CVD (HDP-CVD) function, a photoresist strip function, a photoresist surface preparation, ultraviolet thermal processing (UVTP), etc.

In various embodiments, the plasma chamber **158** is structurally and functionally identical to plasma chamber **118** and has a different identification code than that of the plasma chamber **118**.

Moreover, in various embodiments, the RF transmission line **172** is structurally and/or functionally identical to the RF transmission line **116** (FIG. **2**A). An RF transmission line is described further in FIG. **3**.

In some embodiments, the RF cable **162** is coupled to the output **102**, the RF cable **166** is coupled to the output **108**, and the RF cable **170** is coupled to the output **112**.

FIG. **3** is a diagram of an embodiment of a structure of an RF transmission line **186**, which is an example of the RF transmission line **116** (FIG. **2**A) or the RF transmission line **172** (FIG. **2**B). The RF transmission line **186** includes a cylinder **188**, e.g., a tunnel, etc., that is bolted to an impedance matching circuit **190**, which is an example of the impedance matching circuit **104** (FIG. **2**A) or the impedance matching circuit **156** (FIG. **2**B). The impedance matching circuit **190** is coupled with an RF cable **191**, which is an example of the RF cable **106** (FIG. **2**A) or the RF cable **162** (FIG. **2**B). Within a hollow of the cylinder **188** lies an insulator **192** and an RF rod **194**.

The RF transmission line **186** is bolted via bolts B**1**, B**2**, B**3**, and B**4** to the impedance matching circuit **190**. In one embodiment, the RF transmission line **186** is bolted via any number of bolts with the impedance matching circuit **190**. In some embodiments, instead of or in addition to bolts, any other form of attachment, e.g., glue, screws, etc., is used to attach the RF transmission line **186** to the impedance matching circuit **190**.

The RF transmission rod **194** is coupled with an output **196** of the impedance matching circuit **190**. Also, an RF strap **198**, also known as RF spoon, is coupled with the RF transmission rod **194** and with an RF rod **202**, a portion of which is located within a support **204**, e.g., a cylinder. In an embodiment, a combination of the cylinder **188**, the RF strap **198**, the support **204** and the RF rod **202** forms the RF transmission line **186**. The support **204** provides support to a plasma chamber **206**, which is an example of the plasma chamber **118** (FIG. **2**A) or the plasma chamber **158** (FIG. **2**B). The support **204** is attached to a chuck **208** of the plasma chamber **206**. The chuck **208** is an example of the chuck **120** (FIG. **2**A) or the chuck **174** (FIG. **2**B). An RF signal is supplied from the x MHz generator (FIG. **2**A or **2**B) via the RF cable **191**, the impedance matching circuit **190**, the RF rod **194**, the RF strap **198**, and the RF rod **202** to the chuck **208**.

Referring back to FIG. **2**B, in some embodiments, the RF transmission line **172** is structurally identical to the RF transmission line **116** (FIG. **2**A). For example, the RF transmission line **172** includes identical elements as that of the RF transmission line **116**. Examples of elements of an RF transmission line include an RF rod that is coupled to an impedance matching circuit, a cylinder that surrounds the RF rod, an RF spoon, an RF rod that is coupled to the RF spoon and to a chuck, and a cylinder that surrounds at least a portion of the RF rod.

In various embodiments, the RF transmission line **172** is structurally identical to the RF transmission line **116** and has different identification code than that of the RF transmission line **116**.

In a number of embodiments, the RF transmission line **172** is functionally identical to the RF transmission line **116**. For example, the RF transmission line **172** has similar characteristics to that of the RF transmission line **116**. To illustrate, the RF transmission line **172** has an inductance within a range of inductance of the RF transmission line **116**. As another illustration, RF transmission line **172** has a capacitance that is within a range of capacitance of the RF transmission line **116**. As yet another illustration, the RF transmission line **172** has a resistance within a range of a resistance of the RF transmission line **116**. As another illustration, RF transmission line **172** has a combination of inductance, resistance, and capacitance that is within a range of combination of inductance, resistance, and capacitance of the RF transmission line **116**.

In some embodiments, the RF transmission line **172** is functionally identical to the RF transmission line **116** and has different identification code than that of the RF transmission line **116**.

In some embodiments, the RF transmission line **172** is structurally and functionally identical to the RF transmission line **116** and has different identification code than that of the RF transmission line **116**.

Similarly, in some embodiments, the impedance matching circuit **156** has the same structure as that of the impedance matching circuit **104** (FIG. **2**A). For example, the impedance matching circuit **156** has the same number of capacitors as that of the impedance matching circuit **104**, and/or the same number of inductors as that of the impedance matching circuit **104**. Also, in this example, the capacitors in both the impedance matching circuits **104** and **156** are connected with each other in the same manner, e.g., serial, parallel, etc. Moreover, in this example, the inductors in both the impedance matching circuits **104** and **156** are connected with each other in the same manner, e.g., serial, parallel, etc.

In various embodiments, the impedance matching circuit **156** is structurally identical to the impedance matching circuit **104** and has a different identification code than that of the impedance matching circuit **104**.

In several embodiments, the impedance matching circuit **156** performs the same function as that performed by the impedance matching circuit **104**. For example, the impedance matching circuit **156** has similar characteristics to that of the impedance matching circuit **104**. To illustrate, the impedance matching circuit **156** has an inductance within a range of inductance of the impedance matching circuit **104**. As another illustration, the impedance matching circuit **156** has a capacitance that is within a range of capacitance of the impedance matching circuit **104**. As another illustration, impedance matching circuit **156** has a combination of inductance and capacitance that is within a range of combination of inductance and capacitance of the impedance matching circuit **104**.

In various embodiments, the impedance matching circuit **156** performs the same function as that performed by the impedance matching circuit **104** and has different identification code than that of the impedance matching circuit **104**.

In various embodiments, the impedance matching circuit **156** has the same structure and performs the same function as that performed by the impedance matching circuit **104**, and has different identification code than that of the impedance matching circuit **104**.

The RF cable **162** is structurally the same as that of the RF cable **106** (FIG. **2**A). For example, each RF cable **162** and RF cable **106** includes a conductor, which is surrounded by an insulator. As another example, the RF cable **162** has the same dimensions, e.g., length, diameter, etc., as that of the RF cable **106**.

In some embodiments, the RF cable **162** has the same structure as that of the RF cable **106** and has a different identification code than that of the RF cable **106**.

In various embodiments, the RF cable **162** performs the same function as that of the RF cable **106**. For example, the RF cable **162** has similar characteristics to that of the RF cable **106**. To illustrate, the RF cable **162** has a resistance within a range of a resistance of the RF cable **106** and/or has a capacitance within a range of a capacitance of the RF cable **106** and/or has an inductance within a range of an inductance of the RF cable **106**.

In several embodiments, the RF cable **162** performs the same function as that performed by the RF cable **106** and has a different identification code than that of the RF cable **106**.

In a number of embodiments, the RF cable **162** has the same structure and performs the same function as that of the RF cable **106**, and has a different identification code than that of the RF cable **106**.

Similarly, the RF cable **166** has the same structure as that of the RF cable **110** (FIG. **2**A) and/or performs the same function as that of the RF cable **110** and/or has a different identification code than that of the RF cable **110**. Moreover, the RF cable **170** has the same structure as that of the RF cable **114** (FIG. **2**A) and/or performs the same function as that of the RF cable **114** and/or has a different identification code than that of the RF cable **114**.

The RF cables **162**, **164**, **170**, the impedance matching circuit **156**, the RF transmission line **172**, and the plasma chamber **158** are parts of the tool **152** of the plasma system **150**.

In various embodiments, the tool **133** (FIG. **2**A), which is a golden tool, provides a higher yield than that provided by the tool **152**.

The x MHz RF generator generates and supplies RF power via the output **160**, the RF cable **162**, the impedance matching circuit **156**, and the RF transmission line **172** to the chuck **174** on which the wafer **178** is placed for etching. Moreover, the y MHz RF generator generates and supplies RF power via the output **164**, the RF cable **166**, the impedance matching circuit **156**, and the RF transmission line **172** to the chuck **174**. Also, the z MHz RF generator generates and supplies RF power via the output **168**, the RF cable **170**, the impedance matching circuit **156**, and the RF transmission line **172** to the chuck **174**. When a process gas is supplied from a gas supply via a gas feed and gas inlets of the upper electrode **176** to a space between the upper electrode **176** and the chuck **174** and the chuck **174** receives RF power from RF signals supplied by the x, y, and/or z MHz RF generators, the process gas is ignited to generate plasma within the plasma chamber **158**.

The complex impedance sensor **154** measures a voltage magnitude, a current magnitude, and a phase between the voltage magnitude and the current magnitude when RF signal is supplied by the x MHz RF generator via the output **160**. Similarly, another complex impedance sensor (not shown) coupled to the output **164** measures a voltage magnitude, a current magnitude, and a phase between the voltage magnitude and the current magnitude when RF signal is supplied by the y MHz RF generator via the output **164**. Also, a complex impedance sensor (not shown) coupled to the output **168** measures voltage, current, and phase between the voltage and current when RF signal is supplied by the z MHz RF generator via the output **168**.

The processor **128** that is coupled to the complex impedance sensor **154** via a cable **212** receives via the cable **212** the complex voltage and current measured by the complex impedance sensor **154**, receives the complex voltage and current measured by the complex impedance sensor coupled to the output **164**, and receives the complex voltage and current measured by the complex impedance sensor coupled to the output **168**.

The processor **128** determines an etch rate associated with the plasma system **150** based on the complex voltage and current received from the complex impedance sensor **154**. For example, the processor **128** determines an etch rate associated with the plasma system **150** in a manner similar to that of determining an etch rate associated with the plasma system **100**. As another example, the processor **128** determines an etch rate ER**1501** as being equal to $C_{11}V_2+C_{12}I_2$, where V_2 is a voltage magnitude measured by the complex impedance sensor **154** and I_2 is a current magnitude measured by the complex impedance sensor **154**. As another example, an etch rate ER**1502** is calculated as $C_{21}V_2+C_{22}I_2+C_{23}V_2^2+C_{24}V_2I_2+C_{25}I_2^2$. As yet another example, an etch rate ER**1503** is calculated as $C_{31}V_2+C_{32}I_2+C_{33}V_2^2+C_{34}V_2I_2+C_{35}I_2^2+C_{36}V_2^3+C_{37}V_2^2I_2+C_{38}V_2I_2^2+C_{39}I_2^3$. As another example, an etch rate ER**1504** is calculated as $C_{41}V_2+C_{42}I_2+C_{43}V_2^2+C_{44}V_2I_2+C_{45}I_2^2+C_{46}V_2^3+C_{47}V_2^2I_2+C_{48}V_2I_2^2+C_{49}I_2^3+C_{50}V_2^4+C_{51}V_2^3I_2+C_{52}V_2^2I_2^2+C^{53}V_2I_2^3+C_{54}I_2^4$. As another example, the processor **128** calculates an etch rate ER**150***n* as being equal to a Taylor series expansion, which is also an nth order polynomial, where n is an integer. To illustrate, the processor **128** calculates the etch rate **150***n* as the nth order polynomial that converges to a value.

The processor **128** compares the etch rate determined using the tool **133** (FIG. **2**A) with the etch rate determined using the tool **152** to determine whether the etch rate determined using the tool **133** is the same as or within a limit of the etch rate determined using the tool **152**. For example, the processor **128** determines whether the etch rate ER**1001** matches or is within a limit of the etch rate ER**1501**. As another example, the processor **128** determines whether the etch rate ER**1002** matches or is within a limit of the etch rate ER**1502**. As yet another example, the processor **128** determines whether the etch rate ER**1003** matches or is within a limit of the etch rate ER**1503**. As another example, the processor **128** determines whether the etch rate ER**1004** matches or is within a limit of the etch rate ER**1504**. As another example, the processor **128** determines whether the etch rate ER**100***n* matches or is within a limit of the etch rate ER**150***n*.

Upon determining that it is not the case that the etch rate determined using the tool **133** is the same as or within a limit of the etch rate determined using the tool **152**, the processor **128** sends a signal to the x MHz RF generator to adjust the voltage V_2 and/or the current I_2. It should be noted that in some embodiments, adjustment of both V_2 and I_2 is an adjustment of power. In various embodiments, power is a product of V_2 and I_2. The processor **128** sends the signal to the x MHz RF generator to adjust the voltage V_2 and/or the current I_2 to facilitate achieving the etch rate determined using the tool **133**. For example, when the etch rate ER**1501** does not match or is not within the limit of the etch rate ER**1001**, the processor **128** sends a signal to the x MHz RF generator to change the voltage V_2 and/or the current I_2 to facilitate matching the etch rate ER**1001** with the etch rate **1501**. As another example, when the etch rate ER**150***n* is not within a limit of the etch rate ER**100***n*, the processor **128** sends a signal to the x MHz RF generator to change the voltage V_2 and/or the current I_2 to facilitate matching the etch rate ER**100***n* with the etch rate **150***n*.

Upon receiving a signal from the processor **128** via a line **220**, the x MHz RF generator adjusts, e.g., increases, decreases, etc., the voltage V_2 and/or current I_2 that is generated by the x MHz RF generator to achieve the etch rate that is determined using the tool **133**. For example, to achieve the etch rate **100***n*, the x MHz RF generator adjusts a magnitude of power that is delivered or supplied via the output **160**, the RF cable **162**, the impedance matching circuit **156**, and the RF transmission line **172** to the plasma chamber **158** in which the wafer **178** is placed. As another example, to achieve the etch rate **100***n*, the x MHz RF generator adjusts a magnitude of voltage of an RF signal and/or a magnitude of a current of the RF signal that is supplied via the output **160**, the RF cable **162**, the impedance matching circuit **156**, and the RF transmission line **172** to the plasma chamber **158**.

When an etch rate determined using the tool **152** matches or is within a limit of an etch rate determined using the tool **133**, chamber-to-chamber matching of etch rate is achieved.

In some embodiments, the processor **128** of the host system **130** maintains a recipe over time for generating plasma within the plasma chambers **118** and **158** during a time the constant etch rate is maintained within the plasma chambers **118** and **158**. For example, the processor **128** maintains the same or similar pressure within the plasma chambers **118** and **158**, and/or maintains the same or similar temperature within the plasma chambers **118** and **158**, and/or maintains the same or similar frequency of the x MHz RF generators within the plasma chambers **118** and **158**, and/or maintains the same or similar frequency of the y MHz RF generators within the plasma chambers **118** and **158**, and/or maintains the same or similar frequency of the z MHz RF generators within the plasma chambers **118** and **158**, and/or maintains same or similar chemistries of one or more process gases within the plasma chambers **118** and **158** and/or maintains same or similar amount of a first gap between the upper electrode **122** and the chuck **120** (FIG. **2**A) and a second gap between the upper electrode **176** and the chuck **174**. In this example, the pressure within the plasma chamber **118** is similar to the pressure within the plasma chamber **158** when the pressures are within a range of each other. Moreover, in this example, the temperature within the plasma chamber **118** is similar to the temperature within the plasma chamber **158** when the temperatures are within a range of each other. Also, in this example, the frequency of the x MHz RF generator of the plasma system **100** is similar to the frequency of the x MHz RF generator of the plasma system **150** when the frequencies are within a range of each other, the frequency of the y MHz RF generator of the plasma system **100** is similar to the frequency of the y MHz RF generator of the plasma system **150** when the frequencies are within a range of each other, and the frequency of the z MHz RF generator of the plasma system **100** is similar to the frequency of the z MHz RF generator of the plasma system **150** when the frequencies are within a range of each other. Further, in this example, the first gap is similar in amount to the second gap when the first and second gaps are within a range of each other.

In a variety of embodiments, similar chemistries are maintained within the plasma chambers **118** and **158** when an amount of each process gas is maintained within a pre-determined range in each of the plasma chambers **118** and **158**. In some embodiments, similar chemistries are maintained within the plasma chambers **118** and **158** when each type of process gas in a combination of types of process gases is maintained within each of the plasma chambers **118** and **158**. For example, both the plasma chambers **118** and **158** have similar chemistries when the plasma chambers **118** and **158** have a fluorine containing gas of the same amount or of amounts with a pre-determined range of each other. In various embodiments, similar chemistries are maintained within the plasma chambers **118** and **158** when types of process gases in the plasma chambers **118** and **158** are the same. For example, both the plasma chambers **118** and **158** have similar chemistries when the plasma chambers **118** and **158** have a fluorine containing gas.

It should be noted that in some embodiments, any number of RF generators are used in the plasma system **150**.

FIG. **4**A is a block diagram of an embodiment of a plasma system **250** for determining coefficients of voltage and current used to determine an etch rate. The plasma system **250** includes the plasma system **100** (FIG. **2**A) and an etch rate measurement device (ERMD) **252**. The ERMD **252** is coupled to the processor **128** via a cable **254** and has a line of sight via a window **256** of the plasma chamber **118**. The line of sight is directed into a space in which plasma is generated within the plasma chamber **118**. For example, the ERMD **252** includes a spectrophotometer that monitors plasma within the plasma chamber **118** to measure intensity of radiation emitted by the plasma via the window **256**. In some embodiments, the window **256** is made of a transparent material that allows light emitted by the plasma to pass through, e.g., glass. In various embodiments, the window **256** is a translucent window. The intensity is directly proportional to an etch rate of a layer of the dummy wafer **124** that is consumed by the plasma. The processor **128** receives the measured intensity via the cable **254** to determine the etch rate as directly proportional to the intensity. As another example, for a known recipe, the ERMD **252** measures a thickness of the dummy wafer **124** at a time tm**1** and measures a thickness of the dummy wafer **124** at a time tm**2**, after time tm**1** and after etching the dummy wafer **124**. The ERMD **252** determines an etch rate ER**2501** of the dummy wafer **124** as a ratio of a difference between the thickness at the time tm**2** and the thickness at the time tm**1** over a difference between the times tm**2** and tm**1**. The etch rate ER**2501** is provided by the ERMD **252** via the cable **254** to the processor **128**. In some embodiments, instead of the ERMD **252** determining the etch rate ER**2501**, the processor **128** determines the etch rate ER **2501** from the measured intensity and provides the etch rate ER **2501** to the memory device **132** for storage. Examples of the known recipe include a pressure maintained within the plasma chamber **118**, a temperature maintained within the plasma chamber **118**, a gap between the upper electrode **122** and the chuck **120**, an amount of power supplied by the x, y, and z MHz RF generators, frequencies of the x, y, and z MHz RF generators, or a combination thereof.

As described above, the complex impedance sensor **119** provides a measurement of a complex voltage and current to the processor **128** via the cable **127**. The processor **128** receives the measurement of the complex voltage and current, extracts a voltage magnitude V_3 and a current magnitude I_3 from the measurement and provides the voltage V_3 magnitude and the current magnitude I_3 to the memory device **132** for storage. In some embodiments, the voltage magnitude V_3 is the same as the voltage magnitude V_1 that is determined by using the plasma system **100** and the current magnitude I_3 is the same as the current magnitude I_1 that is determined by using the plasma system **100**. Moreover, the processor **128** determines an etch rate ER **2501** from the measured intensity and provides the etch rate ER **2501** to the memory device **132** for storage.

In some embodiments, instead of the plasma system **100**, another plasma system is used to determine coefficients of voltage and coefficients of current that are used to determine an etch rate. For example, an impedance matching circuit that has the same structure and/or same function as that of the impedance matching circuit **104** and/or has a different identification number than that of the impedance matching circuit **104** is used instead of the impedance matching circuit **104**. As another example, a cable that has the same structure and/or same function as that of the cable **106** and/or has a different identification number than that of the cable **106** is used instead of the cable **106**. As yet another example, an RF transmission line that has the same structure and/or same function as that of the RF transmission line **116** and/or has a different identification number than that of the RF transmission line **116** is used instead of the RF transmission line **116**. As another example, a plasma chamber that has the same structure and/or same function as that of the plasma chamber **118** and/or has a different identification number than that of the plasma chamber **118** is used instead of the plasma chamber **118**.

In various embodiments, instead of the dummy wafer **124**, a semiconductor wafer is used in the plasma system **250** when the x, y, and/or z MHz RF generators generate the RF signals to measure the intensity of plasma within the plasma chamber **118** and to measure complex voltage and current at the output **102**.

In a number of embodiments, the plasma system **250** includes any number of RF generators.

FIG. **4**B is a block diagram of an embodiment of a plasma system **270** for determining coefficients of voltage and current used to determine an etch rate. The plasma system **270** is the same as the plasma system **150** (FIG. **2**B) except that a dummy wafer **276** is used in the plasma chamber **158** instead of the semiconductor wafer **178** (FIG. **2**B). Moreover, the plasma system **270** includes an ERMD **272**, which measures an etch rate ER**2701**. The etch rate ER**2701** is provided by the ERMD **272** via a cable **274** to the processor **128**.

In various embodiments, instead of determining the etch rate ERMD**2701**, the ERMD **272** measures intensity of light emitted by plasma generated within the plasma chamber **158** via a window **273** of the plasma chamber **158** and provides the measured intensity to the processor **128** via the cable **274**. The cable **274** couples the ERMD **272** to the processor **128**. In some embodiments, the processor **128** determines the etch rate ER **2701** as being directly proportional to the measured intensity and provides the etch rate ER **2701** to the memory device **132** for storage.

The processor **128** also receives the complex voltage and current that is measured at the output **160** by the complex impedance sensor **154**, extracts a voltage magnitude V_4 and a current magnitude I_4 from the complex voltage and current, and provides the voltage magnitude V_4 and the current magnitude I_4 to the memory device **132** for storage. In some embodiments, the voltage magnitude V_4 is equal to the voltage magnitude V_2 and the current magnitude I_4 is equal to the current magnitude I_2.

The processor **128** further determines coefficients of the voltage V_1 and of the current I_1 based on the etch rate ER **2501** determined using the plasma system **250** (FIG. **4**A), the etch rate ER **2701**, the voltages V_3 and V_4, and the currents I_3 and I_4. To illustrate, the processor **128** determines the coefficients C_{11} and C_{12} by solving for the coefficients in the etch rate ER **2501** that is equal to $C_{11}V_3+C_{12}I_3$ and in the etch rate ER **2701** that is equal to $C_{11}V_4+C_{12}I_4$.

As another example, the processor **128** determines the coefficients C_{21}, C_{22}, C_{23}, C_{24}, and C_{25} of the voltage V_1 and of the current I_1 based on the etch rate ER **2501** determined using the plasma system **250** (FIG. **4**A), the etch rate ER **2701**, three additional etch rates determined using three additional plasma systems, the voltages V_3 and V_4, and three additional voltages V_5, V_6, and V_7 determined using the three additional plasma systems, the currents I_3 and I_4, and three additional currents I_5, I_6, and I_7 determined using the three additional plasma systems. To illustrate, the processor **128** determines the coefficients C_{21}, C_{22}, C_{23}, C_{24}, and C_{25} by solving for the coefficients in the etch rate ER **2501** that is equal to $C_{21}V_3+C_{22}I_3+C_{23}V_3^2+C_{24}V_3I_3+C_{25}I_3^2$, the etch rate **2701** that is equal to $C_{21}V_4+C_{22}I_4+C_{23}V_4^2+C_{24}V_4I_4+C_{25}I_4^2$, one of the three additional etch rates that is equal to $C_{21}V_5+C_{22}I_5+C_{23}V_5^2+C_{24}V_5I_5+C_{25}I_5^2$, a second one of the three additional etch rates that is equal to $C_{21}V_6+C_{22}I_6+C_{23}V_6^2+C_{24}V_6I_6+C_{25}I_6^2$, and a third one of the three additional etch rates that is equal to $C_{21}V_7+C_{22}I_7+C_{23}V_7^2+C_{24}V_1I_7+C_{25}I_7^2$.

In some embodiments, instead of the plasma system **270**, another plasma system is used to determine coefficients of voltage and coefficients of current that are used to determine an etch rate. For example, an impedance matching circuit that has the same structure and/or same function as that of the impedance matching circuit **156** and/or has a different identification number than that of the impedance matching circuit **156** is used instead of the impedance matching circuit **156**. As another example, a cable that has the same structure and/or same function as that of the cable **162** and/or has a different identification number than that of the cable **162** is used instead of the cable **162**. As yet another example, an RF transmission line that has the same structure and/or same function as that of the RF transmission line **172** and/or has a different identification number than that of the RF transmission line **172** is used instead of the RF transmission line **172**. As another example, a plasma chamber that has the same structure and/or same function as that of the plasma chamber **158** and/or has a different identification number than that of the plasma chamber **158** is used instead of the plasma chamber **158**.

In some embodiments, any number of plasma systems are used to determine unknowns, e.g., coefficients, etc., of an etch rate. For example, a number of unknowns is equal to a number of plasma systems that are used to determine the unknowns.

In various embodiments, instead of the dummy wafer **276**, a semiconductor wafer is used in the plasma system **270** when the x, y, and/or z MHz RF generators generate the RF signals to measure the intensity of plasma within the plasma chamber **158** and to measure complex voltage and current at the output **160**.

FIG. **5** is an embodiment of a graph **290** that plots values of an etch rate model, e.g., a second order polynomial etch rate, a third order polynomial etch rate, a fourth order polynomial etch rate, etc., versus values of measured etch rate, determined using an ERMD when the z MHz RF generator is operational, e.g., supplying power, working, functional, etc., and the x and y MHz RF generators are nonoperational, e.g., not supplying power, not working, not functional, etc. The measured etch rate determined using an ERMD is plotted along an x-axis and the etch rate model is plotted along a y-axis. A best fit straight line may be drawn through various points for each etch rate model of the graph **290**. As shown, the second order polynomial etch rate model in the graph **290** has a coefficient of determination (R^2) of 0.9998, the third order polynomial etch rate model in the graph **290** has an R^2 of 0.9999 and the fourth order polynomial etch rate model in the graph **290** has an R^2 of 0.9997. The greater the R^2, the more accurate mean values of an etch rate model.

FIG. **6** is an embodiment of a graph **292** that plots errors in values of an etch rate, versus modeled etch rates when the z MHz RF generator is operational and the x and y MHz RF generators are nonoperational. The "x"s, asterisks "*", and triangles that have a vertex pointing to the right side in the graph **292** represent errors in values of etch rate models versus the values of the etch rate models when two or more different tools are used. The circles, squares, and triangles that have a vertex that point to the left side in the graph **292** represent errors in values of etch rate models versus the values when an independent tool other than the two or more different tools is used.

FIG. **7**A shows embodiments of a graph **302** and a graph **304**. Each graph **302** and **304** plots measured etch rates, which are etch rates measured using an ERMD, versus modeled etch rates, when the y MHz RF generator is operational and the x and z MHz RF generators are nonoperational. The measured etch rates are plotted on a y-axis and the modeled etch rates is plotted on an x-axis. The asterisks "*" in the graph **302** represent measured etch rates versus modeled etch rates when three different tools are used. The circles in the graph **302** represent measured etch rates versus modeled etch rates when an independent tool other than the three tools is used. It should be noted that the asterisks "*" of the graph **302** generally fit to a straight line. The graph **304** is a zoom-in of a portion of the graph **302**.

FIG. **7**B shows embodiments of a graph **306** and a graph **308**. Each graph **306** and **308** plots measured etch rates versus modeled etch rates, when the z MHz RF generator is operational and the x and y MHz RF generators are nonoperational. The asterisks "*" in the graph **306** represent measured etch rates versus modeled etch rates when three different tools are used. The circles in the graph **306** represent measured etch rates versus modeled etch rates when an independent tool other than the three tools is used. It should be noted that the asterisks "*" of the graph **306** generally fit to a straight line. The graph **308** is a zoom-in of a portion of the graph **306**.

In some embodiments, instead of connecting a complex impedance sensor to an output of an RF generator, the complex impedance sensor is coupled to an input of an impedance matching circuit that is connected to the output of the RF generator.

Although the above-described embodiments are described in terms of etch rate, in various embodiments, a sputtering rate can be used instead of the etch rate. For example, in some embodiments, sputtering rate and etch rate are used interchangeably herein.

It is noted that although the above embodiments are described with reference to complex voltage and current at an output of an RF generator, the above embodiments apply equally as well to complex voltage and current at an input of the impedance matching circuit **104** (FIGS. **2**A & **2**B) and to complex voltage and current at an input of the impedance matching circuit **156** (FIGS. **4**A & **4**B). For example, the complex voltage and current measured at the output **102** is the same as the complex voltage and current at the input **161** of the impedance matching circuit **104** (FIGS. **2**A & **4**A). As another example, the complex voltage and current measured at the output **160** (FIGS. **2**B & **4**B) is the same as the complex voltage and current at the input **161** of the impedance matching circuit **104** (FIGS. **2**B & **4**B). As yet another example, a modeled etch rate determined based on the complex voltage and current determined at the output **102** is the same as a modeled etch rate at the input **161**.

It is further noted that although the above-described operations are described with reference to a parallel plate plasma chamber, e.g., a capacitively coupled plasma chamber, etc., in some embodiments, the above-described operations apply to other types of plasma chambers, e.g., a plasma chamber including an ICP reactor, a TCP reactor, conductor tools, dielectric tools, a plasma chamber including an ECR reactor, etc. For example, the x MHz RF generator, the y MHz RF generator, and the z MHz RF generator are coupled to an inductor within the ICP plasma chamber via an impedance matching circuit.

It is also noted that although the operations above are described as being performed by the processor **128** (FIGS. **2**A, **2**B, **4**A, and **4**B), in some embodiments, the operations may be performed by one or more processors of the host system **130** or by multiple processors of multiple host systems or by a combination of a DSP of an RF generator and a processor of a host system.

It should be noted that although the above-described embodiments relate to providing an RF signal to the lower electrode of a chuck of a plasma chamber, and grounding an upper electrode of the plasma chamber, in several embodiments, the RF signal is provided to the upper electrode while the lower electrode is grounded.

Embodiments described herein may be practiced with various computer system configurations including hand-held hardware units, microprocessor systems, microprocessor-based or programmable consumer electronics, minicomputers, mainframe computers and the like. The embodiments can also be practiced in distributed computing environments where tasks are performed by remote processing hardware units that are linked through a network.

With the above embodiments in mind, it should be understood that the embodiments can employ various computer-implemented operations involving data stored in computer systems. These operations are those requiring physical manipulation of physical quantities. Any of the operations described herein that form part of the embodiments are useful machine operations. The embodiments also relates to a hardware unit or an apparatus for performing these operations. The apparatus may be specially constructed for a special purpose computer. When defined as a special purpose computer, the computer can also perform other processing, program execution or routines that are not part of the special purpose, while still being capable of operating for the special purpose. In some embodiments, the operations may be processed by a computer selectively activated or configured by one or more computer programs stored in the computer memory, cache, or obtained over a network. When data is obtained over a network, the data may be processed by other computers on the network, e.g., a cloud of computing resources.

One or more embodiments can also be fabricated as computer-readable code on a non-transitory computer-readable medium. The non-transitory computer-readable medium is any data storage hardware unit, e.g., a memory device, etc., that can store data, which can be thereafter be read by a computer system. Examples of the non-transitory computer-readable medium include hard drives, network attached storage (NAS), ROM, RAM, compact disc-ROMs (CD-ROMs), CD-recordables (CD-Rs), CD-rewritables (CD-RWs), magnetic tapes and other optical and non-optical data storage hardware units. The non-transitory computer-readable medium can include computer-readable tangible medium distributed over a network-coupled computer system so that the computer-readable code is stored and executed in a distributed fashion.

Although the method operations above were described in a specific order, it should be understood that other housekeeping operations may be performed in between operations, or operations may be adjusted so that they occur at slightly different times, or may be distributed in a system which allows the occurrence of the processing operations at various intervals associated with the processing, as long as the processing of the overlay operations are performed in the desired way.

One or more features from any embodiment may be combined with one or more features of any other embodiment without departing from the scope described in various embodiments described in the present disclosure.

Although the foregoing embodiments have been described in some detail for purposes of clarity of understanding, it will be apparent that certain changes and modifications can be practiced within the scope of the appended claims. Accordingly, the present embodiments are to be considered as illustrative and not restrictive, and the embodiments are not to be limited to the details given herein, but may be modified within the scope and equivalents of the appended claims.

The invention claimed is:

1. A method comprising:

receiving a voltage and a current measured at an output of a radio frequency (RF) generator of a first plasma system;

calculating a sum of a first term, a second term, and a third term, wherein the first term is a first product of a coefficient and a function of the voltage, the second term is a second product of a coefficient and a function of the current, and the third term is a third product of a coefficient, a function of the voltage, and a function of the current;

determining the sum to be the etch rate associated with the first plasma system; and

adjusting power output from an RF generator of a second plasma system to achieve the etch rate associated with the first plasma system,

wherein the method is executed by a processor.

2. The method of claim **1**, wherein the RF generator of the first plasma system is coupled to an impedance matching circuit via a cable, and wherein the impedance matching circuit is coupled to a plasma chamber via an RF transmission line.

3. The method of claim **1**, wherein the function of the voltage in the first product or the third product includes a mathematical power function of the voltage measured at the output of the RF generator of the first plasma system, and the function of the current in the second product or the third product includes a mathematical power function of the current measured at the output of the RF generator of the first plasma system.

4. The method of claim **1**, wherein receiving the voltage and the current measured at the output of the RF generator of the first plasma system is performed using a dummy wafer in a plasma chamber of the first plasma system.

5. The method of claim **1**, wherein the output of the RF generator of the first plasma system is coupled to an input of an impedance matching circuit, wherein the output facilitates a transfer of an RF signal to a plasma chamber via the impedance matching circuit.

6. The method of claim **1**, wherein adjusting the power output from the RF generator of the second plasma system is performed when the second plasma system is used to etch a semiconductor wafer.

7. The method of claim **1**, wherein adjusting the power includes increasing or decreasing the power output from the RF generator of the second plasma system.

8. The method of claim **1**, wherein the first plasma system includes a tool that is identical in function to a tool of the second plasma system and has a different identification than that of the second plasma system.

9. The method of claim **1**, wherein the first plasma system includes a tool that is identical in structure to a tool of the second plasma system and has a different identification than that of the second plasma system.

10. The method of claim **1**, wherein the first plasma system includes a tool that is identical in structure and function to a tool of the second plasma system and has a different identification than that of the second plasma system.

11. The method of claim **1**, wherein the sum is a Taylor series.

12. A method comprising:

receiving a voltage and a current measured at a first time at an output of a radio frequency (RF) generator of a plasma system;

calculating a sum of a first term, a second term, and a third term, wherein the first term is a first product of a coefficient and a function of the voltage, the second term is a second product of a coefficient and a function of the current, and the third term is a third product of a coefficient, a function of the voltage, and a function of the current;

determining the sum to be the etch rate associated with the plasma system; and

adjusting power output at a second time from the RF generator of the plasma system to achieve the etch rate,

wherein the method is executed by a processor.

13. The method of claim **12**, wherein the output of the RF generator is coupled to an input of an impedance matching circuit, wherein the output is used to facilitate transfer of an RF signal to a plasma chamber via the impedance matching circuit.

14. The method of claim **12**, wherein the second time occurs after the first time.

15. The method of claim **12**, wherein the function of the voltage in the first product or the third product includes a mathematical power function of the voltage measured at the first time, and the function of the current in the second product or the third product includes a mathematical power function of the current measured at the first time.

16. The method of claim **12**, wherein receiving the voltage and the current measured at the first time at the output of the RF generator of the plasma system is performed using a dummy wafer in a plasma chamber of the plasma system.

17. The method of claim **12**, wherein the output of the RF generator of the plasma system is coupled to an input of an impedance matching circuit, the impedance matching circuit used to match an impedance of a plasma chamber of the plasma system and an RF transmission line coupled to the plasma chamber with an impedance of an RF cable coupled to the RF generator and the RF generator.

18. The method of claim **12**, wherein adjusting the power at the second time at the output of the RF generator of the plasma system is performed when the plasma system is used to etch a semiconductor wafer.

19. A plasma system for modeling an etch rate, the plasma system comprising:

a radio frequency (RF) generator for generating an RF signal, the RF generator including an output for facilitating transfer of the RF signal;

a complex impedance sensor coupled to the output of the RF generator for measuring a complex voltage and current of the RF signal;

a plasma chamber for generating plasma when the RF signal is received;

an impedance matching circuit coupled to the RF generator via a cable and coupled to the plasma chamber via an RF transmission line;

a processor coupled to the complex impedance sensor for receiving the measurement of the complex voltage and current from the complex impedance sensor, the processor for:

receiving a voltage and a current measured at an output of an RF generator of a second plasma system;

calculating a sum of a first term, a second term, and a third term, wherein the first term is a first product of a coefficient and a function of the voltage measured at the output of the second plasma system, and the second term is a second product of a coefficient and a function of the current measured at the output of the RF generator of the second plasma system, and the third term is a third product of a coefficient, a function of the voltage measured at the output of the RF generator of the second plasma system, and a function of the current measured at the output of the RF generator of the second plasma system;

determining the sum to be the etch rate associated with the second plasma system; and

adjusting power at the output of the RF generator of the first plasma system to achieve the etch rate associated with the second plasma system, wherein adjusting the power is based on the complex voltage and current.

20. The plasma system of claim **19**, wherein the first plasma system includes a tool that is identical in function to a tool of the second plasma system and has a different identification than that of the second plasma system.

* * * * *